INDIAN BANK ZONAL OFFICE,
TIRUPATI

INTERIOR DECORATION & FURNISHING OF INDIAN BANK NEW MICROSATE PALAMANER BRANCH

TENDER SCHEDULE

Er. BadamSundara Rao

M.Tech. (GTE,) M.Tech, (Stru), F.I.E.,

Sundar Associates

D.No.27-9-52, Pulavartistreet,

Kakinada – 533001

Ph.No. 0884 – 2362899, 2375985

INDIAN BANK ZONAL OFFICE,
TIRUPATI

INTERIOR DECORATION & FURNISHING OF INDIAN BANK NEW MICROSATE PALAMANER BRANCH

TENDER SCHEDULE

NAME OF THE TENDERER

Er. BadamSundara Rao

M.Tech. (GTE,) M.Tech, (Stru), F.I.E.,

Sundar Associates

D.No.27-9-52, Pulavartistreet,

Kakinada – 533001

Ph.No. 0884 – 2362899, 23759

INTERIOR DECORATION & FURNISHING OF INDIAN BANK
NEW MICROSATE PALAMANER BRANCH
INDEX

S.No	Item	Page No
1	NOTICE OF INVITATION TO TENDERER	A : 1
2	GENERAL RULES AND INSTRUCTIONS FOR THE GUIDANCE OF TENDERERS	B: 1 - 3
3	GENERAL CONDITIONS OF CONTRACT	C: 1 - 22
4	SPECIAL CONDITONS	D: 1-5
5	SAFETY CODE	E: 1 - 4
6	SPECIFICATIONS OF CIVIL WORKS (Interior Works)	F: 1 - 4
7	METHOD OF MEASUREMENT	G: 1
8	LIST OF APPROVED BRANDS OF MATERIALS / MANUFACTURERS	H: 1 - 2
10	FORM OF TENDER FOR WORKS	J: 1 -2
11	ARTICLES OF AGREEMENT	K: 1 - 2
12	BILL OF QUANTITIES – 1. Civil Works (Interior Works)	PAGES 10
13	SUMMARY OF TOTAL COST OF ALL WORKS	
14	LAYOUT DRAWING	
15	INTERIOR DRAWINGS	

अंचल कार्यालय ZONAL OFFICE इंडियन बैंक Indian Bank तिरुपति TIRUPATI

NOTICE OF INVITATION TO TENDERER

(Only printed documents will be accepted as handwritten documents will not be accepted)

Sealed tenders on item rate basis are invited by Indian Bank, Zonal Office Tirupati Interior Decoration & Furnishing of Indian Bank NEW MICROSATE PALAMANER Branch, Tirupati.

Tender documents may be downloaded and submitted duly filled in from Indian Bank, Zonal Office, PB.No.25 1st FLOOR KR PRIDE, KT Rd, Tirupati, Andhra Pradesh 517507 PhNo:0877250 0035;.along with a bid processing fee of Rs.1000/-

Estimated cost of Work	: As per Tenderer
Earnest Money	1 % of cost of work as per estimation done by Bank's Architect by crossed demand draft payable at Tirupati and drawn in favor of Asst. Gen.Manager, Indian Bank, Tirupati.
Time of Completion	: 30Days
Issue of Tender	: From 30-11-2022 to 05-12-2022 up to 3:00 PM at Indian Bank, Zonal Office, PB.No.25 1st FLOOR KR PRIDE, KT Rd, Tirupati, Andhra Pradesh 517507 Ph No: 0877 250 0035;
Time and date of submission of tender	: Submission to Asst. General Manager, Indian Bank, Zonal Office, PB.No.25 1st FLOOR KR PRIDE, KT Rd, Tirupati, Andhra Pradesh 517507 Ph No: 0877 250 0035 on or Before 05-12-2022 at 3:00 PM as per the instructions in Tender documents.
Time and date of opening of Tender Time & Date ; Place :	: On 05-12-2022 at 4:00 PM at Zonal Office, Indian Bank, PB.No.25 1st FLOOR KR PRIDE, KT Rd, Tirupati, Andhra Pradesh 517507 Ph No: 0877 250 0030
No. of R.A. Bills	3 R.A. Bills including final bill

The Bank will not be bound to accept the lowest tender and reserves the right to accept or reject any or all the tenders without assigning any reason whatsoever.

अंचल कार्यालय ZONAL OFFICE इंडियन बैंक Indian Bank इलाहाबाद ALLAHABAD तिरुपति TIRUPATI

GENERAL RULES AND INSTRUCTIONS FOR THE GUIDANCE OF TENDERERS

1. Tenders are hereby invited by Indian Bank, Zonal Office, Tirupati for Interior Decoration & Furnishing of Indian Bank NEW_MICROSATE PALAMANER Branch Estimated cost of work is As per Tenderer

2. Contract documents consisting of the plans, complete specifications, the schedule of quantities of the various classes of work to be done, and the set of conditions of contract to be completed with by the person whose tenders may be accepted, which will also be found in the form of tenders can be seen / purchased at the Indian Bank, Zonal Office, PB.No.25 1st FLOOR KR PRIDE, KT Rd, Tirupati, Andhra Pradesh 517507 Ph No: 0877 250 0035; between the hours of 10.00a.m. - 4.00p.m. and every day except on Sundays and Bank holidays.

The site for the work is available/or the site for the work shall be made available in parts as specified below.

3. Tenders, must be placed in sealed cover, with the name of the project written on the envelopes to be submitted addressing to Asst. General Manager, Indian Bank. Zonal Office, PB.No.25 1st FLOOR KR PRIDE, KT Rd, Tirupati, Andhra Pradesh 517507 Ph No: 0877 250 0035 on or before05-12-2022 at 3:00 PM and will be opened by at Zonal Office, Indian Bank, PB.No.25 1st FLOOR KR PRIDE, KT Rd, Tirupati, on 05-12-2022 at 4:00 PM in presence of the tenderer who may wish to be present.

4. Tender documents may be downloaded and submitted duly filled in from Indian Bank, Zonal Office, PB.No.25 1st FLOOR KR PRIDE, KT Rd, Tirupati, Andhra Pradesh 517507 Ph No: 0877 250 0035;.along with a bid processing fee of Rs.1000/-

The time allowed for the carrying out of the work will be 30 Days for NEW MICROSATE PALAMANER Branch from the Second day after the date of work orders issued by the bank to commence work.

5. The bidder should quote in figures as well as in words the rate, and amount tendered by them. The amount for each item should be worked out and the requisite totals given.

6. When a bidder signs a tender in an Indian language the percentage above or below and the tendered amount and the total amount tendered should also be written in the same language. In the case of illiterate contractors the rates or the amounts tendered should be attested by a witness.

अंचल कार्यालय ZONAL OFFICE इंडियन बैंक Indian Bank तिरुपति TIRUPATI

7. Issue of tender form will be stopped 1 day before the date fixed for the opening of tenders.

8. Earnest Money, amounting to 1 % of Tender cost in the form of Bank Draft drawn in favour of Asst.Gen.Manager, Indian Bank, Tirupati must accompany each tender and each tender is to be in a sealed cover super scribed "**Tender for Interior Decoration & Furnishing of Indian Bank NEW MICROSATE PALAMANER Branch**" and addressed to the Asst. Gen. Manager, Indian Bank, Zonal Office, PB.No.25 1st FLOOR KR PRIDE, KT Rd, Tirupati, Andhra Pradesh 517507 Ph No: 0877 250 0035

9. The bidder, whose tender is accepted will be required to furnish by way of security deposit for the due fulfillment of his contract & the Security Deposit will be collected as shown below:

(I) 10 % of first Rs.1,00,000/- (II) 7.5% of second Rs.1,00,000/- (III) 5% of remaining bill amount.

The Security Deposit shall be collected as detailed in clause No 12 (page C: 6) of the General conditions of the contract.

10. The acceptance of a tender will rest with the Bank, which does not bind itself to accept the lowest tender and reserves to itself the authority to reject any or all of the tenders received without the assignment of a reason. All tenders in which any of the prescribed conditions are not fulfilled or are incomplete in any respect are liable to be rejected.

The Bank reserves the right to accept the tender in full or in part and the tenderer shall have no claim for revision of rates or other conditions if his tender is accepted in parts.

11. Canvassing in connection with tenders is strictly prohibited and the tenders submitted by the Contractors who resort to canvassing will be liable to rejection.

12. All rates shall be quoted on the proper form of the tender alone.

13. An item rate tender containing percentage below/above will be summarily rejected. However, where a bidder voluntarily offers a rebate for payment within a stipulated period, this may be considered.

14. On acceptance of the tender, the name of the accredited representative (s) of the bidder, who would be responsible for taking instructions from the Employer / CONSULTANTS shall be communicated to the Employer.

अंचल कार्यालय ZONAL OFFICE इंडियन बैंक Indian Bank तिरुपति TIRUPATI

15. Special care should be taken to write the rates in figures as well as in words and the amounts in figures only, in such a way that interpolation is not possible. The total amount should be written both in figures and in words. In case of figures, the words 'Rs.' Should be written before the figure of rupees and words T' after the decimal figures, e.g. Rs.2.15 P. and in case of words, the word 'Rupees' should precede and the word 'Paise' should be written at the end, unless the rate is in whole rupees and followed by the words 'only', it should invariably be upto two decimal places. While quoting the rate in schedule of quantities, the word 'only' should be written closely following the amount and it should not be written in the next line. If there is discrepancy in the rate of item in figures and words, then the amount mentioned in words will be considered for tender amount purpose.

16. The Bank does not bind itself to accept the lowest or any tender and reserves to itself the right of accepting the whole or any part of the tender and the tenders shall be bound to perform the same at the rate quoted.

17. Sales Tax or any other tax on material or on finished works like work's contract tax. Turn-over Tax, etc., in respect of this contract shall be payable by the bidder and the Bank will not entertain any claim whatsoever in this respect.

18. The tender for works shall remain open for acceptance for a period of 90 (Ninety) days from the date of opening of tenders. If any bidder withdraws his tender before the said period, then the bank shall be at liberty to forfeit Earnest Money paid along with the tender.

19. It will be obligatory on the part of the bidder to tender and sign and tender documents for all the component parts and that, after the work is awarded, he will have to enter into an agreement for each component with the competent authority in the bank.

20. The bidder has to submit original and duplicate tender in separate sealed covers at time of submission of tender by mentioning original and duplicate on the sealed cover.

अंचल कार्यालय ZONAL OFFICE इंडियन बैंक Indian Bank इलाहाबाद ALLAHABAD तिरुपति TIRUPATI

GENERAL CONDITIONS OF CONTRACT

Except where provided for in the description of the individual items in the schedule of quantities and in the specifications and conditions laid down hereinafter and in the Drawings, the work shall be carried out as per standard specifications and under the direction of Employer/Architect.

1. INTERPRETATION

In constructing these conditions, the specifications, the schedule of quantities, tender and Agreement, the following words shall have the meaning herein assigned to them except where the subject or context otherwise requires.

i) **Employer:** The term Employer shall denote Asst.Gen.Manager, at Zonal Office, Indian Bank, Tirupati with their Corporate Office at Premises, Expenditure & Estate Department, Indian Bank, Corporate Office, 254-260, Avvai Shanmugam Salai, Royapettah, Chennai - 600014 and any of its employees representative authorized on their behalf.

ii) **CONSULTANTS:** The term CONSULTANTS shall means M/s. SUNDAR ASSOCIATES, Architectural Engineers& Consulting Engineers , D.NO.27-9-52, Pulavarti street, Kakinada, - 533001. or in the event of his/ their ceasing to be the CONSULTANTS for the purpose of this contract such other persons/s as the Employer shall nominate for the purpose.

iii) **Bidder:** The firm who has submitted the bid in response to the tender notice issued by the Bank.

iv) **Contractor:** The term Contractor shall mean Bidder selected by Employer for performance of the work and his/ their heirs, legal representatives, assigns and successors.

iv) **Site:** The site shall mean the site where the works are to be executed as shown within boundary in red border on the site plan including any building and erections thereon allotted by the Employer for the contractor's use.

v) **Site Engineer:** The Site Engineer may be appointed by the bank. The bank may also determine the number of Site Engineers and the supporting staff at site office to assist them and also whether the Site Engineer shall be temporary or permanent. As far as possible, the Site Engineer should assume charge of his post before the contractor reports on site of work. Where more than one Site Engineer is appointed, one of them shall be designated as Senior Site Engineer by the Premises Department and the other Site engineer shall be resorting to the Senior Site Engineer.

अंचल कार्यालय ZONAL OFFICE इंडियन बैंक Indian Bank तिरुपति TIRUPATI

vi) **Drawings:** The work is to be carried out in accordance with drawings, specifications, the schedule of quantities and any further drawings which may be given by the Employer during the execution of the work.

All drawings relating to work given to the Contractor together with a copy of schedule of quantities are to be kept at site and the Employer/CONSULTANTS shall be given access to such drawings or schedule of quantities whenever necessary.

In case any detailed Drawings are necessary, the Contractor shall prepare such detailed drawings and/or dimensional sketches therefore and have it confirmed by the Employer/CONSULTANTS prior to taking up such work.

The Contractor shall ask in writing for all clarifications on matters occurring anywhere in drawings, specifications and schedule of quantities or to additional instructions at least Ten days ahead from the time when it is required for implementation so that the Employer may be able to give decision thereon.

vii) "The Works" shall mean the work or works to be executed or done under this contract.

viii) "Act of Insolvency" shall mean any act as such as defined by the Presidency Towns Insolvency Act or in Provincial Insolvency Act or any amending statutes.

ix) "The Schedule of Quantities" shall mean the schedule of quantities as specified and funning part of this contract.

x) "Priced Schedule of Quantities" shall mean the schedule of quantities duly priced with the accepted quoted rates of the Contractor.

2. Scope

The work consists of Tender for Interior Decoration & Furnishing of Indian Bank PALAMANER Branch in accordance with the "drawings" and "Schedule of Quantities". The Civil works are within scope of this tender. It includes furnishing all materials, labour, tools and equipment and management necessary for and incidental to the construction and completion of the work. All work, during its progress and upon completion, shall conform to the lines, elevations and grades as shown on the drawings furnished by the Employer/CONSULTANTS. Should any detail essential for efficient completion of the work be omitted from the drawings and specifications it shall be the responsibility of the Contractor to inform the Employer/CONSULTANTS and to furnish and install such detail with Employer's/Architect's concurrence, so that upon completion of the proposed work the same will be acceptable and ready for use.

ZONAL OFFICE Indian Bank तिरुपति TIRUPATI

Employer/CONSULTANTS may in their absolute discretion issue further drawings and/or written instructions, details, directions and explanations, which are, hereafter collectively referred to as "The Employer's/Architect's instructions" in regard to.

a) The variation or modification of the design quality or quantity of works or the addition or omission or substitution of any work.

b) Any discrepancy in the drawings or between the schedule of quantities and/or drawings and/or specification.

c) The removal from the site of any defective material brought thereon by the Contractor and the substitution of any other material thereof.

d) The demolition removal and/or re-execution of any work executed by the Contractor/s.

e) The dismissal from the work of any persons employed thereupon.

f) The opening up for inspection of any work covered up.

g) The rectification and making good of any defects under clauses hereinafter mentioned and those arising during the maintenance period (retention period).

The Contractor shall forthwith comply with and duly execute any work comprised in such Employer's/Architect's instructions, provided always that verbal instructions, directions and explanations given to the Contractor's or his representative upon the works by the Employer/CONSULTANTS shall if involving a variation be confirmed in writing to the Contractor/s within seven days. No works, for which rates are not specifically mentioned in the priced schedule of quantities, shall be taken up without written permission of the Employer/CONSULTANTS. Rates of items not mentioned in the priced schedule of quantities shall be fixed by the employer in consultation with the CONSULTANTS as provided in clause "Variation".

The contractor shall get test certificate of various materials if required by Employer/ Architect at his cost.

Regarding all factory made products for which ISI marked products are available, only products bearing ISI marking shall be used in the work as shown in list of approved brand of materials.

अंचल कार्यालय ZONAL OFFICE इंडियन बैंक Indian Bank तिरुपति TIRUPATI

3. TENDERER SHALL VISIT THE SITE

Intending bidder shall visit the site and make himself thoroughly acquainted with the local site condition, nature and requirements of the works, facilities of transport condition, effective labour and materials, access and storage for materials and removal of rubbish. The bidder shall provide in their tender for cost of carriage, freight and other charges as also for any special difficulties and including police restriction for transport etc., for proper execution of work as indicated in the drawings. The successful bidder will not be entitled to any claim of compensation for difficulties faced or losses incurred on account of any site condition which existed before the commencement of the work or which in the opinion of the Employer/CONSULTANTS might be deemed to have reasonably been inferred to be so existing before commencement of work.

4. TENDERS

The entire set of tender paper issued to the bidder should be submitted fully priced and also signed on the last page together with initials on every page. Initial/signature will indicate the acceptance of the tender papers by the bidder.

(Also see Para 15 of General Rules and Instructions for guidance of bidders). (Page B: 1) The

schedule of quantities shall be filled in as follows:

i) The 'Rate' column to be legibly filled in ink in both English figures and English words.

ii) Amount column to be filled in for each item and the amount for each sub head as detailed in the "Schedule of Quantities".

iii) All corrections are to be initialed.

iv) The 'Rate Column' for alternative items shall be filled up.

v) The 'Amount' column for alternative items of which the quantities are not mentioned shall not be filled up.

vi) In case of any errors/omissions in the quoted rates, the rates given in the tender marked 'Original' shall be taken as correct rates.

No modifications, writing or corrections can be made in the tender papers by the bidder, but may at his option offer his comments or modifications in a separate sheet of paper attached to the original tender papers.

The Employer reserves the right to reject the lowest or any tender and also to discharge any or all of the tenders for each section or to split up and distribute any item of work to any specialist firm or Finns, without assigning any reason.

ZONAL OFFICE
इंडियन बैंक Indian Bank
तिरुपति
TIRUPATI

The bidders should note that the tender is strictly on the item rate basis and their attention is drawn to the fact that the rates for each and every item should be correct, workable and self-supporting. If called upon by the Employer/CONSULTANTS detailed analysis of any or all the rates shall be submitted. The Employer/CONSULTANTS shall not be bound to recognize the contractor's analysis.

The work will be paid for as "measured work" on the basis of actual work done and not as "lump sum" contract. All items of work inscribed in the schedule of quantities are to be deemed and paid as complete works in all respects and details including preparatory and finishing works involved, directly, related to and reasonably detectable from the drawings, specifications and schedule of quantities and no further extra charges will be allowed in this connection. In the case of lump-sum charges in the tender in respect of any item of works, the payment of such items of work will be made for the actual work done on the basis of lump-sum charges as will be assessed to be payable by the Employer/CONSULTANTS.

The Employer has power to add to, omit from any work as shown in drawings or described in specifications or included in schedule of quantities and intimate the same in writing but no addition, omission or variation shall be made by the contractor without authorization from the Employer. No variation shall vitiate the contract.

The bidder shall note that his tender shall remain open for consideration for a period of three months from the date of opening of the tender.

5. AGREEMENT

The successful bidder may be required to sign agreement as may be drawn up to suit local conditions and shall pay for all stamps and legal expenses, incidental thereto.

6. PERMITS AND LICENCES

The Contractor will arrange permits and licenses for release of material, which are under Government control. The employer will render necessary assistance, sign any forms or applications that may be necessary. The basic price of controlled material for the purpose of valuing the tender is to be considered as stipulated below. This will also be the basis of adjustments in settling the contractor's bills.

7. GOVERNMENT AND LOCAL RULES

The Contractor shall conform to the provisions of all local Bye-laws and Acts relating to the work and to the Regulations etc., of the Government and Local Authorities and of any company with whose system the structure is proposed to be connected. The Contractor shall give all notices required by said Act, Rules, Regulations and Bye-laws etc. and pay all fees payable to such authority/authorities for execution of the work involved. The cost, if any, shall be deemed to have been included in his quoted rates, taking into account all liabilities for licenses, fees for footpath,

अंचल कार्यालय ZONAL OFFICE इंडियन बैंक Indian Bank तिरुपति TIRUPATI

encroachment and restorations etc., and shall indemnify the Employer against such liabilities and shall defend all actions arising from such claims or liabilities.

8. TAXES AND DUTIES

The bidders must include in their tender prices quoted for all duties royalties, cess Service Tax , GST and sales tax or any other taxes or local charges if applicable.

No extra claim on this account will in any case be entertained.

9. PROVISIONAL SUMS (P S)

All provisional sums described in the schedule of quantities as P S shall be exclusively allotted to the purchase of materials and not for any handling and fixing to be done by the contractor. Such costs of handling and fixing with profit (including transport charges if required) shall be separately included in the contract price as described in the schedule of quantities.

The disposal of the amounts covered under this head will be absolutely at the discretion of the Employer. Contractor is to make payments for these materials to the suppliers on certificate or order issued by the Employer/Architecture and realizes them through his bills from the Employer.

10. QUANTITY OF WORK TO BE EXECUTED

The quantities shown in the schedule of quantities are intended to cover the entire new structure indicated in the drawings but the Employer reserves the right to execute only a part or the whole or any excess thereof without assigning any reasons therefore.

11. OTHER PERSONS ENGAGED BY THE EMPLOYER

The employer reserves the right to execute any part of the work included in this contract or any work, which is not included in this contract by other Agency or persons and Contractor, shall allow all reasonable facilities and use of his scaffolding for the execution of such work. The Contractor shall extend all cooperation in this regard.

12. EARNEST MONEY AND SECURITY DEPOSIT

The bidder will have to deposit an amount of 1% of Tender cost in the form of Bank Draft drawn in favour of Asst.Gen.Manager, Indian Bank.Zonal Office, Tirupati at the time of submission of tender as an Earnest Money. The employer is not liable to pay any interest on the Earnest Money. Tender will be considered as incomplete, if not accompanied with the EMD and will be rejected.

अंचल कार्यालय ZONAL OFFICE Indian Bank तिरुपति TIRUPATI

The Earnest Money of the unsuccessful bidder will be refunded without any interest soon after the decision to award the work is taken or after the expiry of the validity period of the tender.

अंचल कार्यालय
ZONAL OFFICE
तिरुपति
TIRUP

The successful bidder to whom the contract is awarded will have to deposit as **initial security deposit a further sum to make up 1% of the value of the accepted tender including the Earnest Money.** The initial Security Deposit will have to be made within Four days from the date of acceptance of tender, failing which the Employer at his discretion may revoke the letter of acceptance and forfeit the Earnest Money deposit furnished along with the tender. The Security Deposit will be collected as shown below:

(I) 10 % of first Rs.1,00,000/- (II) 7.5% of second Rs.1,00,000/- (III) 5% of remaining bill amount.

The retention amount will be refunded to the contractor 14 days (Fourteen) days after the end of defects liability period provided he has satisfactorily carried out all the work and attended to all defects in accordance with the conditions of the contract. No interest is allowed on retention money.

13. CONTRACTOR TO PROVIDE EVERYTHING NECESSARY

The Contractor shall provide everything necessary for the proper execution of the work according to the intent and meeting of the drawings, schedule of quantities and specifications taken together whether the same may or may not be particularly shown or described therein provided that the same can reasonably be inferred there from and if the contractor finds any discrepancies therein he shall immediately and in writing, refer the same to the Employer/CONSULTANTS whose decision shall be final and binding. The contractor shall provide himself for ground and fresh water for carrying out of the works at his own cost. The Employer shall on no account be responsible for the expenses incurred by the contractor for hired ground or fresh water obtained from elsewhere.

The rates quoted against individual items will be inclusive of everything necessary to complete the said items of work within the contemplation of the contract, and beyond the unit price no extra payment will be allowed for incidental or contingent work, labour and/or materials inclusive of all taxes and duties whatsoever except for specific items, if any, stipulated in the tender documents.

The contractor shall supply, fix and maintain at his own cost, for the execution of any work, all tools, tackles, machineries and equipments and all the necessary centering, scaffolding, staging, planking, timbering, strutting, shoring, pumping, fencing, boarding, watching and lighting by night as well as by day required not only for the proper execution and protection of the said work but also for the protection of the public and safety of any adjacent roads, streets, walls, houses, buildings, all other erections, matters and things and the contractor shall take down and remove any or all such catering, scaffolding, planking, timbering, strutting, shoring etc., as occasion shall be required or when ordered so to do, and shall fully reinstate and make good all matters and things disturbed during the execution of works to the satisfaction of the Employer/CONSULTANTS.

अंचल कार्यालय ZONAL OFFICE तिरुपति TIRUPATI

The contractor shall at all times give access to workers employed by the Employer or any men employed on the buildings and to provide such parties with proper sufficient and if required, special scaffolding, hoists and ladders and provide them with water and lighting and leave or make any holes, grooves etc., if any work, where directed by the employer as may be required to enable such workmen to lay or fix pipes, electrical wiring, special fittings etc. The quoted rates of the bidders shall accordingly include all these above mentioned contingent works.

14. TIME OF COMPLETION, EXTENSION OF TIME & PROGRESS CHART

1. **Time of Completion:** The entire work is to be completed in all respects within the stipulated period. The work shall deemed to be commence within One day from the date of acceptance letter or date of handing over of site, whichever is earlier. Time is the essence of the contract and shall be strictly observed by the Contractor.

The work shall not be considered as complete until the Employer/CONSULTANTS have certified in writing that this has been completed and the Defects Liability Period shall commence from the date of such certificate.

2. **Extension of Time:** If in the opinion of the Employer/CONSULTANTS the works be delayed (a) by reason of any exceptionally inclement weather, or (b) by reason of instructions from the Employer in consequence of proceedings taken or threatened by or disputes, with adjoining or neighboring owners or (c) by the works, or delay, of other Contractors or tradesmen engaged or nominated by the Employer and not referred to in the specification or (d) by reason of authorized extra and additions or (e) by reason of any combination of workmen or strikes or lock-out affecting any of the building trades or (f) from other causes which the Employer may consider are beyond the control of the contractor, the Employer at the completion of the time allowed for the contract shall make fair and reasonable extension of time for completion in respect there for. In the event of the Employer failing to give possession of the site upon the day specified above the time of completion shall be extended suitably.

In case of such strikes or lockouts, as are referred to above, the contractor shall, immediately give the Employer, written notice thereof. Nevertheless, the contractor shall use his best endeavors all that to prevent delay, and shall do all that may be reasonably required, to the satisfaction of the Employer to proceed with the works and on his doing so that it will be ground of consideration by the Employer for an extension of time as above provided. The decision of the Employer as to the period to be allowed for an extension of time for completion hereunder (which decision shall be final and binding on the contractor) shall be promulgated at the conclusion of such strike or lock-out and the Employer shall then, in the event of an extension being granted, determine and declare the final completion date. The provision in clause 15 with respect to payment of liquidated damages shall, in such case, be read and construed as if the extended date fixed by the Employer were substituted for and the damage shall be deducted accordingly.

ZONAL OFFICE
इंडियन बैंक Indian Bank
TIRUPATI

3. **Progress of Work**: During the period of construction the Contractor shall maintain proportionate progress on the basis of a Programme Chart submitted by the Contractor immediately before commencement of work and agreed to by the Employer/CONSULTANTS. Contractor should also include planning for procurement of scarce material well in advance and reflect the same in the Programme Chart so that there is no delay in completion of the project.

15. LIQUIDATED DAMAGES

Should the work be not completed to the satisfaction of the Employer/CONSULTANTS within the stipulated period, the Contractor shall be bound to pay to the Employer a sum calculated as given below by way of liquidated damages are not as penalty during which the work remains un-commenced or un-finished after the expiry of the completion date.

a) For contracts having time for completion 6 months and less	0.5% of the Tender amount per week subject to a ceiling of 5% of the accepted contracted sum.

16. TOOLS, STORAGE OF MATERIALS, PROTECTIVE WORKS AND SITE OFFICE REQUIREMENTS

The Contractor shall provide, fix up and maintain in an approved position proper office accommodation for the contractor's representative and staff which offices shall be open at all reasonable hours to received instruction notices or communications and clear away on completion of the works and make good all work disturbed.

All drawings maintained on the site are to be carefully mounted on boards of appropriate size and covered with a coat of approved varnish. They are to be protected from ravages of termites, ants and other insects.

The contractor shall provide at his own cost all-artificial light required for the work and to enable other contractors and sub-contractors to complete the work within the specified time.

The contractor shall provide a suitable temporary hut for the watchmen and clear away the same when no longer required and to provide all necessary attendance, light etc. required.

The contractor shall arrange for temporary latrines for the use of workers and filed staff and keep the same in a clean and sanitary condition to the satisfaction of the Public Health Authorities and

अंचल कार्यालय ZONAL OFFICE इंडियन बैंक Indian Bank तिरुपति TIRUPATI

shall cause such latrines and soil to be cleared away whenever necessary and shall make good all the works disturbed by these conveniences.

Every precaution shall be taken by the contractor to prevent the breeding of mosquitoes on the works during the construction, and all receptacles, cisterns, water tanks etc., used for the storage of water must be suitably protected against breeding of mosquitoes. The contractor shall identify the Employer against any breach of rules in respect of antimalarial measures.

The Contractor shall not fix or place any placards or advertisement of any description or permit the same to be fixed or placed in or upon any boarding, gantry, building structure other than those approved by the Employer.

Protective Measures: The Contractor from the time of being placed in possession of the site must make suitable arrangements for watching, lighting and protecting the work, the site and surroundings properly by day by night on Sundays and other holidays.

Contractor shall indemnify the Employer against any possible damage to the building, roads, or members of the public in course of execution of the work.

The Contractor shall provide necessary temporary enclosures, gates, entrances etc., for the protection of the work and materials and for altering and adopting the same as may be required and removing on completion of the works and making good all works disturbed.

Storage of Materials: The Contractor shall provide and maintain proper sheds for the proper storage and adequate protection of the materials etc. and other work that may be executed on the site including the tools and materials of sub-contractors and remove same on completion.

Tools: Levels, prismatic compass, steel and metallic tapes and all other instruments found necessary on the works shall be provided by the Contractor for the due performance of this contract as instructed by the Site Engineer.

All measuring tapes shall be of steel and suitable scaffolding and ladders that may be required for safely taking measurement and shall be supplied by the Contractor.

The masons and the supervisors on the work shall carry with them always a one meter or two meter steel tape, a measuring tape of 30metres, a spirit level, a plumb bob and a square and shall check the work to see that the work is being done according to the drawing and specifications. The Site Engineer will use any or all measuring instruments or tools belonging to the Contractors as he chooses for checking the works executed or being executed on the contract.

The Contractor should cover in his rates for making provisions for all reasonable facilities for the use of his scaffolding, tools and plant etc., by subcontractors for their work.

ZONAL OFFICE
इंडियन बैंक Indian Bank
तिरुपति
TIRUPATI

17. NOTICE AND PATENTS OF APPROPRIATE AUTHORITY AND OWNERS

The Contractor shall conform to the provisions of any Acts of the Legislature relating to the work and to the Regulations and Bye-laws of any authorities, and/or any water lighting and other companies, and/or authorities with whose systems the structures were proposed to have connection and shall before making any variations from the drawings or specification that may be associated to so conform, give the Employer/CONSULTANTS written notices specifying the variations proposed to be made and the reasons for making them and apply for instruction thereon. The Employer/CONSULTANTS on receipt of such intimation shall give a decision within a reasonable time.

The Contractor/s shall arrange to give all notices required for by the said Acts, Regulations or Bye-laws to be given to any authority and to pay to such authority or to any public officer all fees that may be properly chargeable in respect of the work and lodge the receipts with the Employer. The Contractor shall indemnify the Employer against all claims in respect of patent rights, royalties, damages to buildings, roads or members of public in course of execution of work and shall defend all actions arising from such claims and shall keep the Employer saved harmless and indemnified in all respects from such actions, costs and expenses.

18. CLEARANCE SITE AND SETTING OUT WORKS

The site shown on the plan shall be cleared of all obstructions and materials, rubbish of all kinds. The contractor shall set out the works and shall be responsible for the true and perfect setting out of the work and for the correctness of the positions, levels, dimensions and alignment of all parts thereof. If at any time, any error shall appear during the progress of any part of the work the contractor shall at his own expenses rectify such error, if called upon to the satisfaction of the Employer. The contractor shall further set out the works to the alternative positions at the site until one is finally approved and the rates quoted in his tender should include for this and no extra on this account will be entertained.

19. DATUM

The average Floor level will be considered "Datum" which is however, subject to final confirmation by the Employer/CONSULTANTS. All levels shown in the drawings are to be strictly adhered to.

20. BENCHES

Any contractor is to construct and maintain proper benches of all the main walls, in order that the lines and levels may be accurately checked at all items.

The wire nails will be driven on the top of Sal wood post on the centre lines of partitions, semi-partitions, counters, walls, in order that lines may be stretched between the Sal wood posts and accurate intersection of interior works. Centre line of interior items etc., may be clearly indicated and checked at any time if it is so required.

अंचल कार्यालय ZONAL OFFICE इंडियन बैंक Indian Bank तिरुपति TIRUPATI

21. CONTRACTOR IMMEDIATELY TO REMOVE ALL OFFENSIVE MATTERS

All dust, filth or other matters of any offensive nature taken out of Interior items or other place shall not be deposited on the surface but shall be at once carted away by the contractor to place outside site of work.

22. ACCESS

Any authorized representative of the Employer shall at all reasonable times have free access to the works and/or to the workshops, factories or other places where materials are being prepared or constructed for the work and also to any place where the materials are lying or from where they are being obtained and the contractor shall give every facility to the bank or their representatives necessary for inspection and examination and test of the materials and workmanship. Except the representatives of the Employer no person shall be allowed at any time without the written permission of the Employer.

23. MATERIALS, WORKMANSHIP, SAMPLES, TESTING OF MATERIALS

All the works specified and provided for in the specifications or which may be required to be done in order to perform and complete any part thereof shall be executed in the best and most workman like manner with materials of the best and approved quality of the respective kinds in accordance with the particulars contained in and implied by the specifications and as represented by the drawings or according to such other additional particulars, and instructions as may from time to time be given by the Employer/CONSULTANTS during the execution of the work and to his entire satisfaction.

If required by the Employer/CONSULTANTS the Contractor shall have to carry out tests on materials and workmanship in approved materials testing laboratories or as prescribed by the Employer/CONSULTANTS at his own cost to prove that the materials etc., under test conform to the relevant I.S. Standards or as specified in the specifications. The necessary charges for preparation of sample, transporting, testing etc., shall have to be borne by the Contractor. No extra payment on this account should in any case be entertained.

All the materials except where otherwise described stores and equipment required for the full performance of the work under the contract must be provided through normal channels and must include charge for import duties, sales tax, Octroi and other charges and must be the best of their kind available and the Contractor/s must be entirely responsible for the proper and efficient carrying out of the work. The work must be done in the best workmanlike manner. Samples of all materials to be used must be submitted to the Employer/CONSULTANTS when so directed by the Engineer/CONSULTANTS and written approval from Employer/CONSULTANTS must be obtained prior to placement of order.

Should the work be suspended by reason of rain, strike, lock-outs or any other cause, the contractor shall take all precautions necessary for the protection of work and at his own expenses shall make good any damage arising from any of these causes.

ZONAL OFFICE
तिरुपति
TIRUPATI

The Contractor shall cover up and protect from damages, from any cause, all new work and supply all temporary/doors, protection to windows, and any other requisite protection for the execution of the work whether by himself or special tradesmen or sub-contractor and any damage caused must be made good by the contractor at his own expenses.

24. REMOVAL OF IMPROPER WORK

The Employer shall during the progress of the work have power to order in writing from time to time the removal from the work within such reasonable time or times as may be specified in the order of any materials which in the opinion of the Employer/Architect are not in accordance with specifications or instructions, the substitution or proper re-execution of any work executed with materials or workmanships not in accordance with the drawings and specifications or instructions. In case the contractor refuses to comply with order the Employer shall have the power to employ and pay other agencies or carryout the work and all expenses consequent thereon or incidental thereto as certified by the Employer/Architect shall be borne by the contractor or may be deducted from any money due to or that may become due to the contractor. No certificate, which may be given by the CONSULTANTS, shall relieve the contractor from his liability in respect of unsound work or bad materials.

25. SITE ENGINEER

The term 'Site Engineer' shall mean the person appointed and paid by the Employer to superintend the work. The contractor shall afford the Site Engineer every facility and assistance for examining the works and materials and for checking and measuring work and materials. The Site Engineer shall have no power to revoke, alter, enlarge or relax any requirements of the contractor or to sanction any day work, additions, alternations, deviations or omissions or any extra work whatever, except in so far as such authority may be specially conferred by a written order of the Employer.

The Site Engineer shall have power to give notice to the contractor or to his foreman, of non-approval of any work or materials and such work shall be suspended or the use of such materials shall be discontinued until the decision of the Employer is obtained. The work will from time to time to be examined by the CONSULTANTS, Engineer from the premises Department of the Employer and the Site Engineer. But such examination shall not in any way exonerate the contractor from the obligation to remedy any defects, which may be found to exist at any stage of the work or after the same is complete. Subject to the limitation of this clause the contractor shall take instructions only from the CONSULTANTS/Employer.

26. CONTRACTOR'S EMPLOYEES

The Contractor shall employ technically qualified and competent supervisors for the work who shall be available (by turn) throughout the working hours to receive and comply with instructions of the Employer/CONSULTANTS. The Contractor shall engage at least one experienced Engineer as site-in-charge for execution of the work. The contractor shall employ in connection with the work persons having the appropriate skill or ability to perform their job efficiently.

अंचल कार्यालय ZONAL OFFICE इंडियन बैंक Indian Bank तिरुपति TIRUPATI

The contractor shall employ local labourers on the work as far as possible.
No labourer below the age of sixteen years and who is not an Indian National shall be employed on the work.

Any labourer supplied by the Contractor to be engaged on the work on day-work basis either wholly or partly under the direct order or control of the Employer or his representative shall be deemed to be a person employed by the Contractor. The Contractor shall comply with the provisions of all labour legislation including the requirements of

a) The Payment of Wages Act.
b) Employer's Liability Act.
c) Workmen's Compensation Act.
d) Contract Labour (Regulation & Abolition) Act, 1970 and Central Rules 1971.
e) Apprentices Act 1961
f) Any other Act or enactment relating there to and rules framed thereunder from time to time

The Contractor shall keep the Employer saved harmless and indemnified against claims if any of the workmen and all costs and expenses as may be incurred by the Employer in connection with any claim that may be made by any workmen.

The Contractor shall comply at his own cost with the order of requirement of any Health Officer of the State or any local authority or of the Employer regarding the maintenance of proper environmental sanitation of the area where the contractor's labourers are housed or accommodated, for the prevention of small pox, cholera, plague, typhoid, malaria and other contagious diseases. The Contractor shall provide, maintain and keep in good sanitary condition adequate sanitary accommodation and provide facilities for pure drinking water at all times for the use of men engaged on the works and shall remove and clear away the same on completion of the works. Adequate precautions shall be taken by the contractor to prevent nuisance of any kind on the works or the lands adjoining the same.

The Contractor shall arrange to provide first-aid treatment to the labourers engaged on the works. He shall within 24 hours of the occurrence of any accident at or about the site or in connection with execution of the works, report such accident to the Employer and also to the competent authority where such report is required by law.

27. DISMISSAL OF WORKMEN

The Contractor shall on the request of the Employer immediately dismiss from works any person employed thereon by him, who may in the opinion of the Employer be unsuitable or incompetent or who may misconduct himself. Such discharges shall not be the basis of any claim for compensation or damages against the Employer or any of their officer or employee.

ZONAL OFFICE
TIRUPATI

28. ASSIGNMENT

The whole of the works included in the contract shall be executed by the contractor and the contractor shall not directly or indirectly transfer, assign or underlet the contract or any part, share or interest therein nor, shall take a new partner, without written consent of the Employer and no subletting shall relieve the contractor from the full and entire responsibility of the contract or from active superintendence of the work during their progress.

29. DAMAGE TO PERSONS AND PROPERTY INSURANCE ETC.

The Contractor shall be responsible for all injury to the work or workmen to persons, animals or things and for all damages to the structural and/or decorative part of property which may arise from the operations or neglect of himself or of any subcontractor or of any of his or a sub-contractor's employees, whether such injury or damage arise from carelessness, accident or any other cause whatsoever in any way connected with the carrying out of this contract. The clause shall be held to include inter-alia, any damage to buildings whether immediately adjacent or otherwise, and the works forming the subject of this contract by rain, wind or other inclemency of the weather. The Contractor shall indemnify the Employer and hold harmless in respect of all and any expenses arising from any such injury or damages to persons of property as aforesaid and also in respect of any claim made in respect of injury or damage under any acts of compensation or damage consequent upon such claim.

The Contractor shall reinstate all damage of every sort mentioned in this clause, so as to deliver the whole of the contract works complete and perfect in every respect and so as to make good or otherwise satisfy all claims for damages to the property or third parties.

The Contractor shall effect the insurance necessary and indemnify the Employer entirely from all responsibility in this respect. The insurance must be placed with a company approved by the Employer and must be effected jointly in the name of the contractor and the Employer and the policy lodged with the latter. The scope of insurance is to include damage or loss to the contract itself till this is made over in a complete state. Insurance is compulsory and must be effected from the very initial stage. The contractor shall also be responsible for anything, which may be excluded from damage to any property arising out of incidents, negligence or defective carrying out of this contract.

The Employer shall be at liberty and is hereby empowered to deduct the amount of any damages, compensations, costs, charges and expenses arising or accruing from or in respect of any such claim or damages from any sums due or to become due to the contractor.

अंचल कार्यालय ZONAL OFFICE Indian Bank तिरुपति TIRUPATI

30. INSURANCE

Unless otherwise instructed the contractor shall insure the works and keep them insured until one month after the virtual completion of the contract against loss or damage by fire and/or earth quake, flood. The contractor shall take insurance policies (1) Contractors all risk insurance policy (2) Workman compensation policy. The insurance must be placed with a company approved by the Employer, in the joint name of the Employer and the contractor for such amount and for any further sum if called to do so by the employer, the premium of such further sum being allowed to the contractor as an authorized extra.

The contractor shall deposit the policy and receipt for premiums paid with the Employer within Four days from the date of issue of work order unless otherwise instructed. In default of the contractor insuring as provided above, the Employer on his behalf may so insure and may deduct the premiums paid from any money due, or which may become due to the contractor. The contractor shall as soon as the claim under the policy is settled or the work reinstated by the Insurance Company should they elect to do so, proceed with due diligence with the completion of the works in the same manner as though the fire has not occurred and in all respects under the conditions of the contract. The contractor in case of rebinding or reinstatement after fire shall be entitled to extension of time for completion as the Employer may deem fit.

31. ACCOUNTS RECEIPTS & VOUCHERS

The contractor shall, upon the request of the Employer furnish them with all the invoices accounts, receipts and other vouchers that they may require in connection with the works under this contract. If the Contractor shall use materials less than what he is required under the contract the value of the difference in the quantity of the materials he was required to use and that he actually used shall be deducted from his dues. The decision of the Employer shall be final and binding on the contractor as to the amount of materials the contractor is required to use for any work under this contract.

32. Before taking any measurement of any work the Site Engineer or a subordinate deputed by him shall give reasonable notice to the contractor. If the contractor fails to attend at the measurements after such notice or fails to countersign or to record the difference within a week from the date of measurement in the manner required by the Site Engineer then in any such event the measurements taken by the Site Engineer or by the subordinate deputed by him as the case may be is final and binding on the contractor and the contractor shall have no right to dispute the same.

33. PAYMENTS

All bills shall be prepared by the contractor in the form prescribed by the Employer/CONSULTANTS. Two interim bills shall be prepared for Subject to minimum value for interim certificate as stated in these documents. The bills in proper forms must be duly accompanied by detailed measurements in support of the quantities of work done and must show deductions for all previous payments, retention money etc.

अंचल कार्यालय ZONAL OFFICE Indian Bank तिरुपति TIRUPATI

The Employer/Architect shall issue a certificate after due scrutiny of the contractor's bill stating the amount due to the contractor from the Employer and the Contractor shall be entitled to payment thereof, within the period of honoring certificates named in these documents.

The amount stated in an interim certificate shall be the total value of work properly executed up to the date of the bill less the amount to be retained by the Employer as retention money vide clause 12 of these conditions and less installments previously paid under these conditions, provided that such certificate shall only include the value of said material and goods as and from such time as they are reasonably, properly and not prematurely brought to or placed adjacent to the work and then only if adequately protected against whether or other causalities.

The Employer will deduct retention money as described in clause 12 of these conditions. The refund of retention money will be made as specified in the said clause.

If the Employer has supplied any materials or goods to the contractor, the cost of any such materials or goods will be progressively deducted from the amount due to the contractor in accordance with the quantities consumed in the work.

All the interim payments shall be regarded as payments by way of advance against the final payment only and not as payments for work actually done and completed and shall not preclude the requiring of bad, unsound, and imperfect or unskilled work to be removed and taken away and reconstructed, or re-erected or be considered as an admission of the due performance of the contract, or any part thereof in any respect or the accruing of any claim, nor shall, it conclude determine or affect in anyway the power of the employer under these conditions or any of them as to the final settlement and adjustment of the accounts or otherwise or in any other way vary or affect the contract. The final bill shall be submitted by the contractor within Fifteen days of the date fixed for completion of the work or of the date of certificate of completion furnished by the Site Engineer and payment shall be made within three months.

FINAL PAYMENT

The final bill shall be accompanied by a certificate of completion from the Employer/CONSULTANTS. Payments of final bill shall be made after deduction of Retention Money as specified in Clause 12 of these conditions, which sum shall be refunded after the completion of the defects liability Period after receiving the Employer's/CONSULTANTS' certificate that the contractor has rectified all defects to the satisfaction of the Employer/ CONSULTANTS. The acceptance of payment of the final bill by the contractor would indicate that he will have no further claim in respect of the work executed.

ZONAL OFFICE
Indian Bank
तिरुपति
TIRUPATI

34. VARIATION / DEVIATION

The price of all such additional items/non-tendered items will be worked out on the basis of rates quoted for similar items in the contract wherever existing or on engineering rate analysis based on prevalent fair price of labour, material and other components as required. The tender rates shall hold good for any increase or decrease in the tendered quantities upto variations of 25%. For variation beyond +/- 25%, then rate for the respective item may be reviewed on mutually agreed terms.

35. SUBSTITUTION

Should the contractor desire to substitute any materials and workmanship, he/they must obtain the approval of the Employer/CONSULTANTS in writing for any such substitution well in advance. Materials designated in this specification indefinitely by such term as "Equal" or "Other approved" etc., specific approval of the Employer/CONSULTANTS has been obtained in writing.

36. PREPARATION OF WORKS FOR OCCUPATION AND USE ON COMPLETION

The whole of the work will be thoroughly inspected by the contractor and deficiencies and defects put right. On completion of such inspection the contractor shall inform the Employer that he has completed the work and it is ready for inspection.

On completion the contractor shall clean all windows and doors including the cleaning and oiling if necessary, of all hardware, inside and outside, all floors, staircases and every part of the building. He will leave the entire building neat and clean and ready for immediate occupation and to the satisfaction of the bank.

37. CLEARING SITE ON COMPLETION

On completion of the works the contractor shall clear away and remove from the site all constructional plant, surplus materials, rubbish and temporary works of every kind and leave the whole of the site and the works clean and in a workmanlike condition to the satisfaction of the Employer/ CONSULTANTS.

38. DEFECTS AFTER COMPLETION

The Contractor shall make good at his own cost and to the satisfaction of the Employer all defects, shrinkage, settlements or other faults, which may appear within **Six months** after completion of the work. In default the Employer may employ and pay other persons to amend and make good such damages, losses and expenses consequent thereon or incidental thereto shall be made good and borne by the contractor and such damages, loss and expenses shall be recoverable from him by the Employer or may be deducted by the employer, in lieu of such amending and making good by the contractor, deduct from any money due to the contractor a sum equivalent to the cost of amending such work and in the event of the amount retained being insufficient, recover that balance from the contractor from the amount retained under Clause No 12 together with any expenses the Employer may have incurred in connection therewith.

अंचल कार्यालय ZONAL OFFICE इंडियन बैंक Indian Bank तिरुपति TIRUPATI

39. CONCEALED WORK

The Contractor shall give due notice to the Employer/CONSULTANTS whenever any work is to be buried in the earth, concrete or in the bodies of walls or otherwise becoming inaccessible later on, in order that the work may be inspected and correct dimensions taken before such burial, in default whereof the same shall at the opinion of the Employer/Architect be either opened up for measurement at the contractor's expense or no payment may be made for such materials. Should any dispute or differences arise after the execution of any work as to measurements etc., or other matters which cannot be conveniently tested or checked, the notes of the Employer/CONSULTANTS shall be accepted as correct and binding on the contractor.

40. ESCALATION

The rate quoted shall be firm throughout the tenure of the contract (including extension of time, if any, granted) and will not be subject to any fluctuation due to increase in cost of materials, labour, sales tax, octroi etc., unless specifically provided in these documents.

41. IDLE LABOUR

Whatever the reasons may be, no claim for idle labour, additional establishment cost of hire and labour charges of tools and plants would be entertained under any circumstances.

42. SUSPENSION

If the contactor except on account of any legal restraint upon the Employer preventing the continuance of the work in the opinion of the Employer shall neglect or fail to proceed with due diligence in the performance of his part of the contract or if he shall more than once make default, the Employer shall have the power to give notice in writing to the contractor requiring the work be proceeded within a reasonable manner and with reasonable dispatch, such notice purport to be a notice under this clause.

After such notice shall have been given the contractor shall not be at liberty to remove from the site of the works or from any ground contiguous thereto any plant or materials to subsist from the date of such notice being given until the notice shall have been complied with. If the contractor shall fail for 7 (Seven) days after such notice has been given to proceed with the works as therein prescribed, the Employer may proceed as provided in clause 43 (Termination of Contract by Employee).

43. TERMINATION OF CONTRACT BY EMPLOYER

If the contractor being a company go into liquidation whether voluntarily or compulsory or being an firm shall be dissolved or being an individual shall be adjudicated insolvent or shall make an assignment or a composition for the benefit of the greater part, in number of amount of his creditors or shall enter into a Deed or arrangement with his creditors, or if the Official Assignee in insolvency, or the Receiver of the contractor in insolvency, shall repudiate the contract, or if a Receiver of the contractor's firm appointed by the court shall be unable, within 14 days after notice to him requiring him to do so, to show to the reasonable satisfaction of the Employer that he is able to carry out and fulfill the contract, and if so required by the employer to give reasonable security therefore, or if thecontractor shall suffer execution to be issued, or shall suffer any payment under

अंचल कार्यालय ZONAL OFFICE Indian Bank तिरुपति TIRUPATI

this contract to be attached by or on behalf of and of the creditors of the contractor, or shall assign, charge or encumber this contract or any payments due or which may become due to the contractor, there under, or shall neglect or fail to observe and perform all or any of the acts matters of things by this contract, to be observed and performed by the contractor within seven days after the notice shall have been given to the contactor in manner hereinafter mentioned requiring the contractor to observe perform the same or shall use improper materials or workmanship in carrying on the works, or shall in the opinion of the employer not exercise such due diligence and make such due progress as would enable the work.

To be completed within due time agreed upon, and shall fail to proceed to the satisfaction of the employer after seven days notice requiring the contractor so to do shall have been given to the contractor as hereinafter mentioned or shall abandon the contract, then and in any of the said cases, the bank may not withstanding previous waiver determine the contract by a notice in writing to the effect as hereinafter mentioned but without thereby effecting the powers of the employer of the obligations and liabilities of the contractor the whole of which shall continue in force as fully as if the contract, had not been so determined and as if the works subsequently executed had been executed by or on behalf of the contractor (without thereby creating any trust in favor of the contractor) further the employer or his agent, or servants, may enter upon and take possession of the work and all plants, tools, scaffolding, sheds, machinery, steam and other power, utensils and materials lying upon premises or the adjoining lands or roads and sell the same as his own property or may employ the same by means of his own servants and workmen in carrying on and completing the works or by employing any other contractors or other persons or person to complete the works, and the contractor shall not in any way interrupt or do any act, matter of thing or prevent or hinder such other contractors or other persons or person to complete the works, and the contractor shall not in any way interrupt or do any act, matter of thing to prevent or hinder such other contractors or other persons or person employed from completing and finishing or using the materials and plants for the works when shall be completed, or as soon thereafter as conveniently may be, the employer shall give notice in writing to the contractor to remove his surplus materials and plants and should the contractor fail to do so within a period of 14 days after receipt by him the employer may sell the same by Public Auction and shall give credit to the contractor for the amount so realized. Any expenses or losses incurred by the employer in getting the works earned out by other contractors shall be adjusted against the amount payable to the contractor by way of selling his tools and plants or due on account of work carried out by the contractor prior to engaging other contractors or against the Security Deposit.

44. ARBITRATION

All disputes or differences of any kind whatsoever which shall at any time arise between the parties hereto touching or concerning the works or the execution or maintenance thereof of this contract or the rights touching or concerning the works or the execution of maintenance thereof of this contract or the construction remaining operation or effect thereof or to the rights or liabilities of the parties or arising out of or in relation thereto whether during or after determination foreclosure or branch of the contract (other than those in respect of which the decision of any person is by the contract expressedto be final and binding) shall after written notice by either party

अंचल कार्यालय ZONAL OFFICE Indian Bank तिरुपति TIRUPATI

to the contract to the other of them and to the Employer hereinafter mentioned be referred for adjudication to a sole arbitrator to be appointed as hereinafter provided.

For the purpose of appointing the sole Arbitrator referred to above, the Employer will send within thirty days of receipt of the notice, to the contractor a panel of three names of persons who shall be presently unconnected with the organization for which the work is executed.

The contractor shall on receipt of the names as aforesaid. Select any one of the persons name to be appointed as a sole Arbitrator and communicate his name to the Employer within thirty days of receipt of the names. The Employer shall thereupon without any delay appoint the said person of the Sole Arbitrator. If the contractor fails to communicate such selection as provided above within the period specified, the component authority shall make the selection and appoint the selected person as the Sole Arbitrator.

If the Employer fails to send to the contractor the panel of three names as aforesaid within the period specified, the contractor shall send to the Employer a panel of three names of persons who shall all be unconnected with either party. The Employer shall on receipt of the named as aforesaid select any one of the persons names and appoint him as the Sole Arbitrator. If the Employer fails to select the person and appoint him as the Sole Arbitrator within 30 days of receipt of the panel and inform the contractor accordingly, the Contractor shall be entitled to appoint one of the persons from the panel as the Sole Arbitrator and communicate his name to the Employer.

If the Arbitrator so appointed is unable or unwilling to act or resigns his appointment or vacates his office due to any reason whatsoever another Sole Arbitrator shall be appointed as aforesaid.

The work under the control shall, however, continue during the arbitration proceedings and no payment due or payable to the contractor shall be withheld on account of such proceedings.

The Arbitrator shall be deemed to have entered on the reference on the date he issued notice to both the parties fixing the date of the first hearing.

The Arbitrator may from time to time, with the consent of the parties, enlarge the time for making and publishing the award.

The Arbitrator shall give a separate award in respect of each dispute or difference referred to him. The Arbitrator shall decide each dispute in accordance with the terms of the contract and give a reasoned award. The venue of arbitration shall be such place as may be fixed by the Arbitrator in his sole discretion.

ZONAL OFFICE
तिरुपति
TIRUPATI

The fees, if any, of the Arbitrator shall, if required to be paid before the award is made and published, be paid half and half by each of the parties. The cost of the reference and of the award including the fees, if any, of the Arbitrator who may direct to and by whom and in what manner. Such costs or any part thereof shall be paid and may fix or settle and amount of costs to be so paid.

The award of the Arbitrator shall be final and binding on both the parties.

Subject to aforesaid the provisions of the Arbitrator Act 1940 or any statutory modifications or re-enactment thereof and the rules made there under, and for the time being in force, shall apply to the arbitration proceedings under this clause.

The Employer and the contractor hereby also agree that Arbitration under clause shall be a condition precedent to any right to action under the contract with regard to the matters hereby expressly agreed to be so referred to arbitration.

अंचल कार्यालय
ZONAL OFFICE
तिरुपति
TIRUPATI

SPECIAL CONDITIONS
(In addition to General Conditions of Contract from Employer)

Name of the Employer : Asst. Gen. Manager, at Zonal Office, Indian Bank, Tirupati

Name of work : Tender for Interior Decoration & Furnishing of Indian Bank NEW MICROSATE PALAMANER Branch at Tirupati

Name of the Architect : M/s SUNDAR ASSOCIATES, Architectural Engineers&
Consulting Engineers,
27-9-52, Pulavarti street,
Kakinada - 533001.
Ph: 0884-2362899, 2375985

1. The Tenders shall study the following "Special conditions" of the Contract, which are in addition to the foregoing General Condition from the employers and these conditions from the employers and these conditions along with Tender Drawings, specifications, BOQ etc., shall from part of the Tender Document. As such the tenderers are advised to study the same carefully.

2. The Special Conditions of the Contract shall supersede the conditions in contradiction to the same in the General conditions of the Contract or any other terms and conditions.

3. The tenders are not allowed to alter or change either the specifications or unit of schedule at the time of quoting. Incomplete tenders, conditional tenders etc., will be rejected.

4. Since the execution of work has to be carried out during office hours, the tenderers are expected to carry out the work with minimum disturbance to office staff.

5. The contractor is allowed to work during night hours and Sunday and holidays after taking specific written permission of the authorities without extra cost to owner.

6. Any cutting or damages to the floors, walls and ceiling shall be made good by the Contractor as directed by the Architect/Employer at the contractor cost.

7. The Contractor is expected that the minimum amount of cutting/drilling shall be done to fix the screws to the walls, ceiling and floors etc.

8. The Contractor shall make his own arrangements for accommodation of workers arranged for the work.

अंचल कार्यालय ZONAL OFFICE तिरुपति TIRUPATI

9. The Interior Decoration items should suit site dimensions.

10. Bidders while submitting the tender should have actually inspected the site and the value of the work have been examined fully before tendering and the tender is based on such examination.

11. The quantities mentioned in the schedule are approximate only and subject to the variations on either side during execution. Any of the items of work, which is not found necessary by Architect/Employer during course of execution of work, shall not be operated.

12. All drawings and specifications shall be returned without fail along with the tender. In case of failure to the return the same; the bidder may not be called for quotation for future works of the employer.

13. The Contractor shall quote for the best materials and workmanship available and whether ambiguity in specifications and drawings, the same shall be got clarified from the Architect/Employer before proceeding with the work.

14. If insisted on, the Contractor shall produce test certificate to the Architect/Employer for the quality of materials concerned. No-delay/Claim on this account will be entertained.

15. Normally all the materials are to be supplied by the Contractor for the above work, except otherwise mentioned, but if the Owner's desire to supply any material to maintain quality of work, the contractor has to accept it and only labour payment will be made as per standard norms of employer.

16. The contractor shall have sufficient allowance in their rates quoted to allow for minor modification in design and finishes as required by Architect/Employer during execution of work.

17. The Employer reserves the right to accept or reject in part of whole of any of the Tenders without assigning any reasons therein and conduct negotiations in the manner considered suitable in order to secure clarifications or better terms from the Tenders.

18. The Contractor shall be solely responsible in case of any accidents to his workers in course of carrying out the work.

19. The contractors are not entitled for any escalation in the prices of materials, labour etc., on any account during the course of the work. The tendered and accepted rates for all items shall be kept valid throughout the period of contract and completing of the same.

अंचल कार्यालय ZONAL OFFICE Indian Bank तिरुपति TIRUPATI

20. The Contractors shall abide by all rules, regulations, and statutes imposed by the Government or other concerned authorities. He shall be responsible for workmen's compensation and the other requirements for housing or any other amenities and site facilities, such as water, power required by the contractors crew and shall provide them at his own cost and risk. Any causality or damage caused by any untoward incident during the execution of work shall be at the entire risk and cost of contractor.

21. If clerk of works is appointed at the site by the Architect, the Contractors shall afford him all facilities for examining the work and materials and recording measurements.

22. Other agencies will be working in the project during the work. The contractors must allow these contractors to use the scaffolding and water and render them general assistance. No extension to the completion time will be allowed on this account unless special delays caused by other agencies.

23. The Contractors shall set out the works for CONSULTANTS approval and during the progress of the work shall amend at his means the contractors' cost, any errors arising from inaccurate setting out, unless the architect shall decide to the contrary.

24. The Contractor shall not, without the written consent of the Architect/Employer, assign this Agreement or sub-let any portion of the works.

25. The Contractors shall be responsible for all structural and decorative damages to the property and for injury caused by the works or workmen to persons, animals, or things and shall hold the Employer harmless in respect thereof. They shall also be responsible for all damages caused to the buildings, subject to this contract, by inclemency of weather, and shall reinstate all damages caused by the same and thoroughly rectify the damages.

26. Employer shall have the right to inspect/supervise the subject work during interior decoration/modification and suggest changes/ alterations/replacements, wherever the work is not as per approved drawing/plan/samples. Employer accepts no responsibility for the costs involved for such work.

27. The Contractor shall carryout the work as per the detailed drawings furnished by the Architect/Employer from time to time. The drawings enclosed with the tender documents are for tender purpose only and not for execution and detailed drawings will be furnished during the execution of work. Contractor quoted rate is deemed to include for the same.

28. The work will have to be carried out strictly in accordance with specifications and drawings and also as per Architect's instructions. Any deviations from the same will be at the contractor's risk.

अंचल कार्यालय ZONAL OFFICE इंडियन बैंक Indian Bank तिरुपति TIRUPATI

29. Applicable income tax, work contract tax, Sales Tax. etc., and GST as per statuary rules and regulations prevailing shall be deducted from running account and final bill of the contractor. All statutory taxes/levis as per prevailing government regulations will be deducted at source from the bill Viz. Sales tax on works contract etc.,

30. Bidders shall make their own arrangement for all tools and plants, labour etc., required for the execution of the work. No delay/claim in this account will be entertained.
31. The Contractor should note that only after the certificate obtained from employer of each item of work, completely in accordance with the specifications and directions given by Employer/Architect the payment of bill would be made in Three R.A. bills including Final R.A. Bill.
32. All the materials required and supplied for the works under this contract shall confirm to Indian Standard Specifications where such materials are used and available for all the items the same shall be provided as approved by the CONSULTANTS/ Employer.

33. All the materials brought to the site shall be stored at Contractor's risk only and the Employer will not be responsible for any theft, pilferage, damage due to any accident etc. owners will not be liable for any claims in this regard until the work are finished and handed over to entire satisfaction of Owner.

34. The Contractor should get the approval of Employer/CONSULTANTS of all materials and fixtures and fittings before using on the work.

35. The rates for all extra items not covered in the original schedule shall take prior permission before commencing of the work. As such all-additional items of work that become necessary during the course of execution will have to be got approved by the **Zonal Office authorities and Architect /Engineer** before execution. If prior permission not obtained payment will not be done for the work

36. After completion of the work, the contractors shall promptly remove his materials and other equipments and clear the site of the debris and rubbish.

37. All the correspondence in regarding to any approval and Technical matters to be made to the Asst. Gen. Manager, Indian Bank, Zonal Office, PB.No.25 1st FLOOR KR PRIDE, KT Rd, Tirupati, Andhra Pradesh 517507 Ph No: 50877 250 0030 While dismantling walls, if necessary, the Contractor has to make all arrangements of diverting all existing open and concealed wiring suitably as per the directive of Architect/ Employer.
39. Before constructing dismantling the walls, the existing doors. If any has to be removed without making any damage and to be stored/fixed as per the directive or Employer / Architect at no extra cost.
40. No mobilization advance will be paid to contractors by employers.

अंचल कार्यालय ZONAL OFFICE इंडियन बैंक तिरुपति TIRUPATI

Value of work to be taken for issue of Interim Certificate for payment is not less than Rs.5,00,000 /- for each R.A. Bill.

42. Refund of Retention Money: 100% of security deposit after completion of defect liability period.

43. Defects Liability Period: Twelve months after date of award of final completion certificate of work.

44. Quantities mentioned are approximate and payment shall be made on actual measurements.

45. The rate of partitions and wall cladding shall include necessary additional framework supports wherever required to suit the site conditions or stability of the frames. Decision of Architect in this regard shall be final.

46. Rate for doors will include provision of hardware like hinges, locks, handles, tower bolts, doorstoppers, automatic door closers etc. of approved design and make.

47. Rates for hardware to include supplying and fixing of necessary matching screws (brass or powder coated).

48. The rates for provisions of furniture shall include for placing the required furniture in position and protecting from damage until handed over to employer.

49. The rates for all painting and polishing works shall include all preparation of surfaces, sandpapering or rubbing down before each coat, all brushes and cleaning materials.

50. After completion of the work the site shall be cleared from all waste, rubble, left over materials etc. and thoroughly cleaned ensuring that all laminates, floorings, walls, furniture surfaces and tops etc. are spotless clean.

51. All movable interior items shall be covered with teak wood beading with regard to 8/19m BWR plywood surfaces exposed to floor.

52. The veneer, Teak wood/Sal wood surfaces will be finished with melamine polish.

53. The Civil contractor is responsible for preparation of openings of Electrical works and other allied works viz., LAN, Telephone, Fire Detection, Fire Alarm etc.. and neatly covering the openings after the Electrical items and other allied items viz., Lan, Telephone, Fire Detection, Fire Alarm etc., are fixed at the earliest in such a way that the progress of Electrical works and other allied works viz., LAN, Telephone, Fire Detection, Fire Alarm etc., is not affected.

54. The Civil contractor should have a qualified supervisor who will be able to study the bill of quantities and drawings and having working knowledge of implementing the same with minimum 3 yrs experience to receive instructions from Architect / employer and implement the same at site and will be available at site of work from 9.00 A.M. to 6.00P.M.

अंचल कार्यालय ZONAL OFFICE तिरुपति TIRUPATI

SAFETY CODE

Scaffolds

i) Suitable scaffolds shall be provided for workmen for all works that cannot safely be done from the ground, or form solid construction except in the case of short duration work, which can be done safely from ladders. When a ladder is used, it shall be of rigid construction made either of good quality wood or steel. The steps shall have a minimum width of 450 mm and a maximum rise of 300 mm. Suitable hand holes of good quality wood or steel shall be provided and the ladder shall be given an inclination not steeper than ¼ to 1 (1/4horizontal and 1 vertical).

ii) Scaffoldings or staging more than 4 m. above the ground floor, swung or suspended from an overhead support or erected with stationary support shall have a guard rail properly bolted, braced or otherwise secured at least 1 m above the floor or platform of such scaffolding or staging and extending along the entire length of the outside and ends thereof with only such openings as may be necessary for the delivery of materials. Such scaffolding or staging shall be so fastened as to prevent it from swaying from the building or structure.

iii) Working platforms, gangways and stairways shall be so constructed that they do not sag unduly or unequally and if the height of the platform, gangway or stairway is more than 4 m. above ground level or floor level, they shall be closely boarded and shall have adequate width and be suitably fenced as described in (ii) above.

iv) Every opening in the floor of a building or in a working platform shall be provided with suitable means to prevent the fall of persons or materials by providing suitable fencing or railing whose minimum height shall be 1 m.

Wherever there are open excavations in ground, they shall be fenced off by suitable railing and danger signals installed at night so as to prevent persons slipping into the excavations.

v) Safe means of access shall be provided to all working places. Every ladder shall be securely fixed. No portable single ladder shall be over 9 m. in length while the width between side rails in rung ladder shall no case be less than 290 mm. for ladder upto and including 3 m. in length. For longer ladders this width shall be increased at least 20 mm. for each additional meter of length.

vi) A sketch of the ladders and scaffolds proposed to be used shall be prepared and approval of the Engineer obtained prior to construction.

अंचल कार्यालय ZONAL OFFICE तिरुपति TIRUPATI

Other Safety Measures

vii) All personal of the contractor working within the plant site shall be provided with safety helmets. All welders shall wear welding goggles while doing welding work and all metal workers shall be provided with safety gloves. Persons employed on metal cutting and grinding shall wear safety glasses.

viii) Adequate precautions shall be taken to prevent danger from electrical equipment. No materials on any of the sites of work shall be so stacked or placed as to cause danger or inconvenience to any person or the public.

Excavation & Trenching

(ix) All trenches, 1.25 m. or more in depth shall at all times be supplied with at least one ladder for each 30 m. in length or fraction thereof. The ladder shall be extended from bottoms of the trench to at least 1 m above the surface of the ground.

x) The contractor shall take all measures on the site of the work to protect the public from accidents and shall be bound to bear the expenses of defense of every suit, action or other proceedings at law that may be brought by any persons for injury sustained owing to neglect of the above precautions and to pay any such persons or which may with the consent of the contractor, be paid to compromise any claim by any such person.

Demolition

xi) Before any demolition works is commenced and also during the process of the work.

a) All roads open areas adjacent to the work site shall either be closed or suitably protected.

b) No electric cable or apparatus, which is liable to be a source of danger over a cable or apparatus used by the operator, shall remain electrically charged.

c) All practical steps shall be taken to prevent danger to persons employed from the risk of fire or explosion or flooding. No floor, roof or other part of the building shall be so over-loaded with debris or materials as to render it unsafe.

अंचल कार्यालय ZONAL OFFICE तिरुपति TIRUPATI

Personal Safety Equipments

i) All necessary personal safety equipment as considered adequate by the Engineer should be kept available for the use of the person employed on the site and maintained in a condition suitable for immediate use, and the contractor should take adequate steps to ensure proper use of equipment by those concerned.

a) Those engaged in white washing and mixing or stacking of cement bags or any materials, which are injurious to the eyes, shall be provided with protective goggles.

b) Those engaged in welding works shall be provided with welder's protective eyesight lids.

c) Stone breakers shall be provided with protective goggles and protective clothing and seated at sufficiently safe intervals.

d) The contractor shall not employ men below the age of 18 years and women on the work of painting with products containing lead in any form. Wherever men above the age of 18 years are employed on the work of lead painting the following precautions should be taken.

i) No paint containing lead or lead products shall be used except in the form of paste or ready-made paint.

ii) Suitable face masks should be supplied for use by the workers when paint is applied in the form of spray or a surface having lead paint dry rubbed and scrapped.

iii) Overalls shall be supplied by the contractor to the workmen and adequate facilities shall be provided to enable the working painters to wash during the cessation of work.

iv) When the work is done near any public place where there is risk of drowning all necessary equipments should be provided and kept ready for use and all necessary steps taken for prompt rescue of any person in danger and adequate provision should be made for prompt first aid treatment of all injuries likely to be sustained during the course of the work.

अंचल ZONAL OFFICE तिरुपति TIRUPATI

iv) Motors, gearing, transmissions, electronic wiring and other dangerous parts of hoisting appliances should be provided with efficient safeguards, hoisting appliances should be provided with such means as well reduce to the minimum of the risk of any part of a suspended load becoming accidentally displaced. When workers are employed on electrical installations which are already energized, insulating mats, wearing apparel, such as gloves, sleeves and boots as may be necessary, should provided. The workers should not wear any rings, watches and carry keys or other materials, which are good conductors of electrically.

v) All scaffoldings, ladders and other safety devices mentioned or described here in shall be maintained in safe condition and no scaffold, ladder or equipment shall be altered or removed while it is in use.

Adequate washing facilities should be provided at or near places of work.

vi) These safety provisions should be brought to the notice of all concerned by display on a notice board at a prominent place at work spot. The person responsible for compliance of the safety code shall be named therein by the contractor.

vii) To ensure effective enforcement of the rules and regulations relating to safety precautions the arrangement made by the contractor shall be open to inspection by the Labour Officer, Engineers of the Department of their representatives.

viii) Notwithstanding the above clause from (i) to (xviii) there is nothing in these to exempt the contractor from the operations of any other Act or Rule in force in the Republic of India.

At every work place there shall be maintained in readily accessible place first aid appliance including an adequate supply of sterilized dressings and sterilized cotton wool.

अंचल कार्यालय ZONAL OFFICE इंडियन बैंक Indian Bank तिरुपति TIRUPATI

SPECIFICATIONS

1). These specifications are for the work to be done, items to be supplied and materials to be used in the works as shown and defined on the drawings and described here in all under the supervision and to the satisfaction of the Architect/ Employer.

2). The workmanship is to the best available and of a high standard, use must be made of 'Specialist' tradesman in all aspects of the work and allowance must in the rates for doing so.

3). The materials and items to be provided by the contractor shall be the best of their respective kinds and as approved by the Architect/Employer in accordance with the samples which may be submitted for approval and generally in accordance with the specifications.

4). Samples of all materials including those specified by name of the manufacturer or the brands, trades name or by the reference to catalogue Nos. are to be submitted to the Architect/Employer for their approval before the contractor either orders delivers in the bulk to site.

5). Samples together with their packing are to be provided by the contractor free of any charge and should any materials are rejected, the same will be removed from the site at the expense of the contractor.

6). The contractor is also required to submit specimen finishes of all colors, fabrics, polish shades etc., for approval of the Architect/Employer before proceeding with such works.

7). The contractor shall produce all invoices, vouchers or receipts account of all purchases done by him for materials if called upon to do so either by Architect or the Employer.

8). The contractor should verify all measurements given in the drawings at the site before commencing the work. Any difference should be clarified with the Architect/ Employer before commencing the work.

9). It should be necessary to prepare shop drawings, the contractor at his own expense prepare and submit at least four sets of such drawings to Architect/Employer for approval.

10). Partition line out shall be done at the site before starting the work and got approved from the Architect/Employer.

अंचल ZONAL OFFICE तिरुपति TIRUPATI

11). **Workmanship for Joinery:** Timbers are to be cut to required size and length and the joinery should start immediately after the line out is finalized. It should be framed up (but not bonded) and stored until required for fixing in position. At this stage it should be bonded and wedged up. Any portion that wraps or develops shakes or other defects shall be replaced before wedging. The whole work is to be framed and finished in a proper line or level and as detailed in the drawings and fitted with all necessary metal ties, straps bolts, screws.

Twinning bonded joints are to be cross-tongued with teak tongues.

12). The contract surfaces of dowels, tendons, wedges etc., shall be glued with proper adhesive. Where ever joinery and carpentry works is likely to come in contract with moisture the adhesive shall be waterproof.

13). The contract shall be responsible for providing and maintaining temporary coverage required for the protection of dressed, finished or semi-finished works if left unprotected.

14). **Plywood:** Plywood shall be of phenol formaldehyde bonded /commercial ply wood of approved type, make, brand etc. Thickness of plywood shall be as per details given in the drawings/ specifications.

15). **Block Board:** Block board shall be of phenol formal dehyde bonded/BWR of approved type, make, and brand etc., Thickness of Block board shall be as per details given in drawings/specifications.

16). **Timber:** Hardwood or Teakwood shall be the best wood locally available and should be well & properly seasoned of mature growth free from worm holes, large loose or dead knots or other defects through improper handling.

Teakwood to be of good quality, free from soft heart, worm & bee holes and other defects.

All wrought timber is to be sawn, planned or works to correct sizes and shapes as shown in the drawings. An allowance of 2 mm shall be permitted for each wrought face.

All wooden members shall be liberally coated and treated with anti-termite paint before fixing.

17). **Laminate:** Laminate sheeting shall be of specified thickness, make and either plain, sued, satin or with design finish and samples showing the surface texture and pattern are to be submitted in proper sizes for approval before use.

The laminates shall be fixed with proper adhesive of approved grade and brand.

अंचल ZONAL OFFICE तिरुपति TIRUPATI

18. **Glass & Glazing:**The glass used for glazing shall be plain, complying with IS : 3548 unless otherwise specified.

The glass shall be free from any defects such as bubbles, undulations, waves and cracks etc.

19. **Hardware:**shall be of approved make and quality samples of each and every hardware item should be submitted and got approved before using. This hardware shall generally confirm to following or as desired by Architect/ Employer.

Butt Hinges: Shall be either brass oxidized or power coated aluminum with pins and washers heavy duty type.

Mortise Locks: Six lever.

Tower bolts: Brass oxidized or powder coated aluminum.

20. **Painting & Polishing:**All materials required for this work shall be of specified and approved manufacturer, delivered to the site in manufacturers containers with seals etc. unbroken and clearly marked with manufacturers name of trademark with a description of the contents and color. All materials to be stored at the site.

All brushes, tools, pots, kettles etc., used in carrying out the work shall be clean and free foreign matter.

Surfaces of the new woodwork, which are to be painted, are to be rubbed down, knotted and topped to the approval of Architect/ Employer. Surface of previously painted wood work which are to be repainted shall be cleaned with soap solution of approve solvent to remove dirt, grease etc., Whilst wet the surface shall be flatted down with suitable abrasive and then rinsed down and allowed to dry. Minor area of defective paint shall be removed by scrapping back to a firm edge and the exposed surface touched in with premier as described and topped with putty. Where the wood mark has been previously painted for polished and it to be newly polished, the same shall be prepared with scrapping, burning off or rubbing down. Surfaces of previously painted metal surface which are to be repainted shall be cleaned, flatted down and any rust and loose scale shall be removed completely by chipping, scrapping and wire brushing back to bare metal and touched in with primer as directed by the Architect/ Employer.

अंचल कार्यालय ZONAL OFFICE तिरुपति TIRUPATI

21. **Aluminum Sections:** Aluminum services shall be factory extruded out of aluminum ingots with smooth finish without any defects like pore, roughness etc., and shall be accurate in size, shape and weight etc.,

The aluminum-extruded sections shall generally confirm to dimensions given in the drawings and specifications, correspondingly ensuring the minimum weight structure as specified in manufacture catalogue.

An allowance of 5% may be allowed for the dimensions of Aluminum sections at discretion of the Architect/Employer.

22. Teakwood bending of 18 X 6 mm size/decorative of various sizes should be melamine polished at places as desired by Architect/Employer.

23. Teakwood members should be painted/melamine polished as directed by Architect / Employer.

24. Each drawer should have two drawer slides of desired length, one 100 mm handle and one lock of approved make at places as desired and as directed by Architect/ Employer.

25. Each shutter should have two auto close Hinges, one 100 mm along handle and one lock etc., of approved make at places as desired and as directed by Architect/ Employer.

26. All exposed edges of 18 mm/12 mm thick particle board/plywood should be covered with 18X6 mm/12 X 6 mm thick Teak wood beading/ laminate at places as desired and as directed by Architect / Employer.

27. Each shutter should have two brass hinges (75 mm long), two brass ball catches, 2 brass tower bolts (75 mm long), and one lock of approved make at places as desired and as directed by Architect/ Employer

28. Architect/Employer should approve samples of all materials, fixtures, fittings, etc., prior to fabrication of interior furniture items (Fixed/Movable).

29. Each flush/panel door shutter should have 3 aluminum hinges (150 mm long), one mortise lock, automatic door closer of approved make at places as desired and as directed Architect/Employer.

30. Each table should have TW foot rest of size 75 mm X 38 mm, CPU Stand wire manager Holes with PVC Cover.

अंचल ZONAL OFFICE तिरुपति TIRUPATI

METHOD OF MEASUREMENT

(1)	Synthetic Carpet/PVC Flooring	Sq.mts area - Finished length X finished width (No deduction shall be made for columns cutouts etc. only finished area shall be paid)
(2)	Partitions/Semi-partitions/ Wall/Column cladding	Sq.mts area - one side only. Finished length X Finished height. The finished height of full ht. partition / wall cladding / column cladding shall be taken from floor finish level to slab bottom / false ceiling bottom whichever is applicable.
(3)	False Ceiling	Sq.mts area - Finished length X finished width (No deduction for light fittings, AC Grills, columns, cutouts etc.,
(4)	Venetian Blinds/Double pleated curtains	Sq.mts area - (one side only) Finished length X finished height of respective item.
(5)	Painting of walls	Sq.mts area - furnished length X finished height of wall painted
(6)	Drapery Rods	Finished length on front facia (In running metres)
(7)	Sun Control Film	Sq.mts area - (one side only) finished length X finished height
(8)	Tables/Chairs	As specified in BOQ

ZONAL OFFICE
तिरुपति
TIRUPATI

Unless otherwise specified in the BOQ, the approved brands for following materials shall be as follows:

Phenol bonded particle board		Novapan/ Ecoboard
Synthetic enamel paint		Berger /Asian/ Nerolac/ ICI etc
Synthetic emulsion paint		Berger /Asian/ Nerolac/ ICI etc
Laminate confirming to IS : 2046-1995		Formica / Decolam / Sunmica / Greenlam or equivalent as approved by Architect / Employer.
Commercial ply wood with ISI certification		Century ply, Green ply, Smart ply, Donear ply, Sharon ply, Jokkar ply, Sonear Ply, Sainaik Ply, Indica Ply Etc or equivalent
Upholstered Cloth/Fabric		Vimal/Orkey/Fabricant /Approved made
Handles, Knobs etc		Italica/ Efficient Gadgets/ Earl Bihari
Drawer Slides		Earl Bihari/ Efficient Gadgets
Locks for Cupboards		Godrej/ Golden/ Efficient Gargets
Venetian Blinds		Vista Levolor/ Luxaflex/ Aerolux
Aluminium False Ceiling		Supersil/ Luxalon
Automatic Door Closer		Dorma
Electrical Switches		Philips/ Gloliite/ As specified in BOQ
Sanitary ware		Hidustan Sanitary ware/ Parry ware
Chairs		Featherlite/ Godrej/ Eurotech/ Amber
Artificial plants		Art Plants/ Kushal
Adhesive		Fevicol/ Approved make
Aluminium Extrusions		Indal
Locks for Doors		Godrej/ Armour/ Acme
Glass panel		Modiguard/ Triveni/ Ashai
Floor springs		EBCO, Everite/ Dorma
Sanding Sealer		Asian/ App.Make
Thinner		Asian/ App.Make
Sun Control Film		Garware
Vertical blinds		Vista Levour/ Luxaflex
Teak wood / Steam beach wood		As per Indian Standard Specifications/ Architect.
Country wood		As per Indian Standard Specifications/ Architect.
Melamine Seater/Matt		Asian/ App.Make
Stainless Steel		Salem
Glass Hinges		Earl Bihari / Efficient Gadgets
Drapery Rods		Vista Levolor / Mac / App.Make
Engraved Glass & Mirrors		Glassier
Veeners		Century/ Green ply/ Jacksons/ True wood/ Archid/ App.Make
Knock down furniture fittings	:	Efficient Gargets

ZONAL OFFICE
तिरुपति
TIRUPATI

Synthetic Carpets		Wonder Weaves/ approved Make
Woolen Carpets		Trans Asia/ approved Make
Rubber Foam		King Foam/ Apex Foam/ Shree Foam
Spot light fixtures		Decon/ Philips / Approved make
Hardware		Efficient Gadgets, Earl Behari (EBCO), Italica etc.,
False ceiling		India. Gypsum or equivalent
G.I. Support system dry wall partition		Gypsum India.
Screws		GKW, Nettle fold or equivalent
Paint		Asian ,Berger or Dulux
Vinyl Flooring		Armstrong, Royal House, Tusker
Polished Granite		Ruby red colour / Jet Black / as approved by Architect / Employer
Vitrified Tiles	;	Regency/ Johnson / Bell Ceramics
Slag cement	:	ACC / Birla / Ultratech/ Ramco/ Nagarjuna / Raasi
Wall putty, Wall primer, acrylic emulsion paint, Cement paint		J & N / Asian / Nerolac / Nippon / Berger /
Ceramic tiles		Jhonson / Bell ceramics / Naveen / Regency / Kajara
Glay sanitary ware	;	Hindware / Raasi / Parryware / somany
Fixtures and fittings of toilet	:	Czar / Jaguar / Raks / Plumber / Marc / chillys / Dollar
Water supply pipes - PVC	:	Prince / Finolex / Supreme / Kissan / sudhakar
Water supply pipes - GI	;	Tata / Zenith / oswal / Kalinga
Sanitary pipes - PVC		Prince / Finolex / Supreme / Kissan / sudhakar

Note: The Contractor shall quote for the best of the material as specified above. The contractor shall obtain proper approval from the Bank's Architect before placing order for the specified materials/agencies. In case of non-availability of the any of the approved/specified materials/agencies during the execution of the work, the Bank's Architect may approve suitable equivalent Brand/Agency and his decision shall be final and binding on the contractor and price variation, if any, shall be adjusted accordingly.

अंचल कार्यालय ZONAL OFFICE तिरुपति TIRUPATI

FORM OF TENDER FOR WORKS

To
Asst. Gen. Manager,
Indian Bank,
Zonal Office,
Tirupati

Dear Sir,

SUB: Tender for Interior Decoration & Furnishing of Indian Bank NEW MICROSATE PALAMANER Branch - Regarding tender.

Having duly examined the tender documents including the drawings, specifications, designs, schedule of quantities relating to the works specified in the underwritten memorandum and having visited the site of the said work and having acquired all the requisite information relating thereto as affecting this tender; 1/ We hereby offer to execute the works specified therein at the rates specified in the schedule of quantities and in accordance, in all respects with the specifications, designs, drawings and instructions in writing referred to in the conditions, the such conditions of the contract and with such materials as are specified, by and in all other respects in accordance with such conditions in the schedule of quantities and conditions of contract so far as applicable.

Should this tender be accepted, in whole or in part, 1/ We hereby agree (i) to abide by ad fulfill all the terms and provisions of the said conditions of the contract annexed hereto and the conditions of tender so far as applicable or in default thereof to forfeit and pay to Asst. Gen. Manager, Indian Bank, Zonal Office, Tirupati. The sums of money mentioned in the said documents.

A sum of 1% of cost of work as per Tenderer is herby forwarded as Earnest Money Deposit in the form of Demand Draft in favour of Asst. Gen. Manager, Indian Bank, Zonal Office, Tirupati.

अंचल कार्यालय ZONAL OFFICE तिरुपति TIRUPATI

1/ We agree (i) that should 1/ We fail to commence the work specified in the above mentioned the bank shall without prejudice to any other right or remedy be the liberty be the liberty to forfeit the Earnest Money, otherwise shall be retained by memorandum, (ii) to execute all the works referred to in the tender document upon the terms and conditions contained or referred to therein and to carry out authorized variations as directed by the Architect/Bank and as per said conditions of the contract.

Our Bankers are:

The names of the Proprietor/Partners/Directors of our firm are:

1)

2)

3)

4)

5)

Signature of bidder .....with seal Dated the .....day of

अंचल कार्यालय ZONAL OFFICE तिरुपति TIRUPATI

K:l

ARTICLES OF AGREEMENT

Articles of agreement made this the .....day of. .....2020. Between Asst. Gen. Manager, Indian Bank, Zonal Office. Tirupati. (Here in after called the Employer') of One part.

AND

M/s.....

.....having its Registered Office at ..... (herein after called 'the contractor') of the other part.

Whereas the Employer is desirous of getting works for **Interior Decoration & Furnishing of Indian Bank NEW MICROSATE PALAMANER Branch** done as per Schedule-1 to this agreement and has annexed drawings, bill of quantities and specifications describing the work to be done are to be prepared by **M/s Sundar Associates, Architectural Engineers& Consulting Engineers, D.no.27-9-52, Pulavarthi street, Kakinada-533001**.. (Here in after called "CONSULTANTS") and whereas the said drawings as per Schedule -2 inclusive, the bills of quantities marked in Tender Schedule and the specifications etc., have been signed by or on behalf of the parties hereto; and where as the contractor has agreed to execute upon and subject to the conditions set forth in schedule - 3 hereto attached (herein after referred to as 'the Condition'), the work shown upon the said drawings and described in the said specifications and included in the said bill of quantities for the sum of

Rs..... (Rupees.....

.....)

NOW IT IS HEREBY AGREED AS FOLLOWS

1). It consideration of the sum of Rs ..... (Rupees .....

...) to be paid at the time and in the manner set forth in the said conditions, the contractor will upon and subject to the said conditions execute and complete the works shown upon the said drawings and described in the said specifications and bill of quantities.

2). The Employer will pay to the contractor the said sum of Rs (Rupees .....) or such become payable hereunder at the times and in the manner specified in the said conditions.

ZONAL OFFICE
तिरुपति
TIRUPATI

3). The terms the 'CONSULTANTS' in the said conditions shall mean M/s SUNDAR ASSOCIATES, D.No.27-9-52, Pulavarty Street, Kakinada 533001. or in the event of their ceasing to be the CONSULTANTS for the purposes of this contract. Such other persons as shall be nominated for that purpose by the said conditions. Provided always that no person subsequently appointed to be the CONSULTANTS for the time being.

4). The said conditions, specifications and priced bill of quantities shall be read and construed as forming part of this agreement, and the parties hereto will respectively abide by and submit themselves to the conditions and stipulations and perform the agreement on their parts respectively in such conditions, specifications and priced bill of quantities contained.

As witness our hand the day and year first above written signed by said

EMPLOYER. **SIGNATURE OF THE EMPLOYER**

In the presence of following witness:

Name : Name •:

Occupation : Occupation :

Address : Address :

Signed by the said **Contractor(s) :**

In the presence of Witness :

SIGNATURE OF THE CONTRACTOR

In the presence of the following witness:

Name : Name :

Occupation : Occupation :

Address : Address :

अंचल कार्यालय ZONAL OFFICE तिरुपति TIRUPATI

SI. No.	Item	Total cost Rs.
1.	Interior works (Civil works)	*Rs*
2.	Total cost of all works	*Rs.*

The job will be awarded to L1 Tenderer whose total value of above all jobs together will be Lowest

MANAGING PARTNER

अंचल कार्यालय ZONAL OFFICE इंडियन बैंक Indian Bank तिरुपति TIRUPATI

INTERIOR DECORATION & FURNISHING OF INDIAN BANK NEW MICROSATE PALAMANER BRANCH

Tender Specifications Indian Bank-_NEW MICROSATE PALAMANER_Branch

1. Interior Furnishing & Civil:

Sl No.	Description of item	Quantity	Unit	Rate (Rs.)	Amount (Rs.)
1	**False Ceiling (Gypboard)**				
	Providing and fixing suspended gypboard false ceiling, which includes Providing & fixing G I Perimeter channels of size 27mm,0.5 mm thk having one flange of 20mm & another flange of 30mm along with perimeter of the ceiling, screws fixed to brick wall/partitions with the help of rawl pluge & Screws. Then suspending G. I Intermediate channels of size 45mm, 0.9mm thk with two flanges of 15mm each from the soffit at 1200mm centres with stell G I Hanger of width 25mm, 0.5mm thk fixed to soffit with GI cleat and steel expansion fasteners. Ceiling section of 0.5 mm thickness having knurled wedge of 51.5mm and two flanges of 26mm each with leafs of 10.5mm are then fixed to the Intermediate channel with the help of connecting clips and in direction perpendicular to the intermediate channel at 450mm centres, 12.5mm tapered edge gypboard is then screwed fixed to ceiling section with 25mm dry wall screws at 230mm centres screw fixing will be done mechanically either with screw driver or drilling machine with suitable attachment. Finally, the tapered and squared edges of the boards are joined at finished to give a flushed finish with requisite joining compound, paper tapes, finisher and premier suitable for Gypsum plaster boards. The entire work shall be finished as per instructions of the Architect. And also finished with two or more coats of acrylic emulsion paint of approved shade and make. No extra cost shall be entertained in completing the entire work in all respect.(For ATM & Manager cabin)	1300	sft		
2	**POP Cornice:**				
	Supplying & fixing of 3 ½"x3" P O P cornice moulding to avoid the crack of the junction point of wall and False ceiling to be fixed with necessary headless screw & finished with proper joint filler.	190	Rft		

अंचल कार्यालय ZONAL OFFICE तिरुपति TIRUPATI

3	**Partitions:**				
	Made out of 2"x2 ½ " (finished size) hardwood frame work (Sal/Hollock) finished with 6mm BWP ply and 1.5mm thk laminate (make and model Nos. as per drawing attached). The partition will have ½"x3" skirting made of MDF with Black Duco paint and all exposed vertical edges to be covered with 3 ½ "x1" White Oak moulding finished with approved/specified shade of polish. The frame work to be done as per drawings/instructions given by the Architect at site/in tender (both horizontal/vertical wooden framework to be placed at 2'-0"'c/c(max). The laminate pattern to be followed as per drawings/instructions given by the Architect. All grooves made in the laminate will be of uniform thickness (i.e 2.5mm thk). Partitions having glass will be made out of 8mm thk clear glass with etching and all exposed glass edges shall be machine polished. The glass shall be fixed with White Oak mouldings of size 1 ½"x1" (as per drawing). The frame work (Teak wood) of size 2"x4" to fix the entrance door and the glass block has to be a single frame work and no extra cost can be claimed for that. The glass blocks shown in the drawing should be of 8"x8"x3" thk of approved make. The top and bottom rall (Teakwood) holding the entrance door has to be of size 21/2"x6". The entire work has to be carried out as per Architect's instruction.				
	NB: All partitions shall have provisions for cuttings made in the frame work for laying the Electrical & Lan conduits as instructed by the architect at the time of execution. Anti-Termite treatment has to be done on the frame work before fixing the ply, The rate includes the providing and fixing of passing tray. No Additional payment will be made for Doors.				
	a. Low ht. Semi Glazed partitions up to 7' 3" Ht.inc., cash counter partition and WC wicket gate	**300**	**Sft**		
	b. Semi glazed full ht. Partition	**220**	**Sft**		
	c. Full ht. Blocked Partition	**360**	**Sft**		
	d. Front Fixed Glazing	-			
	e. Front toughened glass for cash/teller counter (10mm thk with Etching Stickers)	**50**	**Sft**		
4	**Doors:**				
a.	**Entrance Door**				

अंचल कार्यालय ZONAL OFFICE तिरुपति TIRUPATI

	To be made out 12mm thk glass with etching as per design. The glass with etching has to be fixed with top and bottom ralls of size 2 ½ "x6". The ralls to be made out of solid teak (best quality). The door shall have 12"long s/s handle (as shown in the drawing) and also double action floor spring of specified make. The door frame to be made out of 4"x21/2" best quality teak wood. The etching in glass pattern to be done strictly following instructions of the Architect or following the drawing attached. The exposed wood of frames, ralls to be polished as per instructions of the Architect.				
	NB: Size of the door may slightly vary as per site conditions of the glass to be machine polished. The ralls to be made as per design of the Architect.	**120**	**Sft**		
b.	**Flush Doors:**				
	To be made out 35mm thk flush door. The door frame to be made out of 21/2"x2" best quality TW. Necessary cuttings in the flush door for fixing glass (8mm) as shown in the drawing to be strictly followed. The laminate pattern also to be followed.				
	The exposed edges of the glass to be machine polished. The ralls to be made as per design of the Architect. The rate quoted should be inclusive of Godrej 6 pin lever cylindrical lock, Door closure, Door stopper, handles and necessary hardwares.				
a.	**Semi Glazed Door**				
i.	3'.0"x7'0" Doors with Etching for manager cabin & server room etc.,	**2**	**No.**		
b.	Full Blocked door				
	i. 3'0"x7'0" for Storage	**1**	**No.**		
	ii. 2'6"x7'0" for UPS Room	**1**	**No.**		
5	**Tables:**				

अंचल कार्यालय ZONAL OFFICE Indian Bank तिरुपति TIRUPATI

	Fabricated out of 16mm thk BWP ply for top, sides and front finished with 1.5 mm laminate (as per drawing) on all exposed surfaces and enamel paint of oapproved shade and make on internal exposed surfaces. The drawer base to be fabricated out of 6mm BWP Ply, sides & back with 12mm ply and will have sliding channel, multipurpose locks, s/s handles, etc. All tables will have (keyboard trays inside should be finished with 1.5mm laminate), footrest and CPU platforms. The rate shall include all necessary hardware and MDF Skirting with Duco Paint in front, White Oak moulding to cover table edges and provision for Wire Manager. The entire work as per drawing attached and the instructions of the Architect at the time of execution.				
	a. ManagerTable (6'-0"x2'6")	1	No.		
	b. Officer's Table 5'0"x2'6"	1	No.		
6	Working station:				
	Fabricated out of 18mm ply for front, top and rear exposed surfaces & sides (internal rear side to be enamel painted) finished 1.5mm laminate inside part of drawers, shutters and bottom of Keyboard, mouse pad tray, drawers to be finished with approved shade of enamel paint only. All other surfaces to be finished with laminate. Front of the counters to be done as per drawing. The base of drawers and keyboard tray shall be made out of 6mm thk BWP Ply, sides and back of 12mm thk BWP ply and front made out of 18mm ply. All drawers will have Godrej multipurpose locks and S S handle of approved make. The drawers and keyboard tray shall run on sliding channels/efficient gadgets and all table tops shall have provision for wire Managers of approved shade and colour. CPU platforms made out of 18mm ply to be provided as per design and instructions given by Architect at the time of executive. All exposed edges of ply to be finished with White Oak mouldings of approved design and polish of approved shade/colour respectively. Leg rest should also be provided as per Architect's design/instruction. size of eah work station is 5'0"X2'6".Front 12mm thick glass is to be provided as per design	5	Nos		
7	**Cash Counter&single window**	10'-0"			

अंचल कार्यालय ZONAL OFFICE Indian Bank तिरुपति TIRUPATI

	Cash (ht.7'3") with glass. Working top will be 2'-6" ht and customer top will be at 3'8" including thickness. One cash tray to be provided as per instructions given by the Architect at the time of execution. The tray dimension/design provided as per instructions given by Architect's instructions at the time of execution.	**10**	**Rft**		
	Rest of the cash counter as per specifications above item No. 6 and drawing attached in the tender and specification same as counter specifications specified above. A green glass of 8 mm thk. For the front and frosted glass of 12mm thk has to be provided as per design and drawing attached. The green glass has to be fixed with necessary SS screws as per design. All clarifications to be taken before quoting the prices & no extra cost shall be entertained at the time of execution. The first drawer of the cash shall have dividers for keeping different coins and cash notes. The entire work as per the instructions of the Architect at the time of execution.				
8	**Side Credenza for Officer:**				
	Fabricated out of 18mm ply for top and sides and 6mm ply for back finished with 1.5mm laminate in external exposed surfaces and enamel paint inside. The side credenza will have drawers on top as per drawing with sliding channel and below that there will be sliding channel and below that there will be sliding shutters made out of 12mm ply with flush powder coated handles and lock of approved make. The front will also have MDF skirting with Duco polish.	**20**	**sft**		
9	**Work Station**:				
	Fabricated out of 18mm ply with drawer units, Keyboard tray, CPU platforms, leg rest etc., same as item No.4 only without front panel since it will be fixed to the semi ht. glazed partitions.	**20**	**Sft.**		
	Server Room & Sub staff				
10	**ATM Panelling**				

अंचल कार्यालय ZONAL OFFICE Indian Bank तिरुपति TIRUPATI

	Column paneling withn11/2"x1" hard wood fixed to the columns and then finished with 6mm ply and above should be laminated with 1.5mm laminate of approved make and as per drawings and instructions of the Architect. A wooden cornice of size 3"x2" has to be fixed on the edge and around the pillar as per design duly polished as per instructions of the Architect.	260	Sft.		
11	**Writing Ledge with Complaint /Suggestion Box (12mm Glass Top):**				
	Made out of 18mm ply as per design and exposed external surfaces to be laminated and internal surface to be painted with top provided 12mm thk Etched Glass with machine polished edges. The entire work has to be done to the satisfaction of the Architect. The design given has to be strictly followed.		Seats		
12	**Writing Ledge with Cheque Drop Box (12mm Glass Top):**				
	Made out of 18mm ply as per design and exposed external surfaces to be laminated and internal surface to be painted with top provided 12mm thk Etched Glass with machine polished edges. The entire work has to be done to the satisfaction of the Architect. The design given has to be strictly followed.	2	No.		
13	**Notice Board:**				
	Providing & fixing of Soft Board on the customer lobby made of jolly board with a fabric of B/R 175/- per metre. The design and the entire work has to be done as per instructions of the Architect at the time of execution.	20	Sft.		
	Total Interior works				
	ADD FOR MISCELLENEOUS WORKS				

अंचल कार्यालय ZONAL OFFICE Indian Bank तिरुपति TIRUPATI

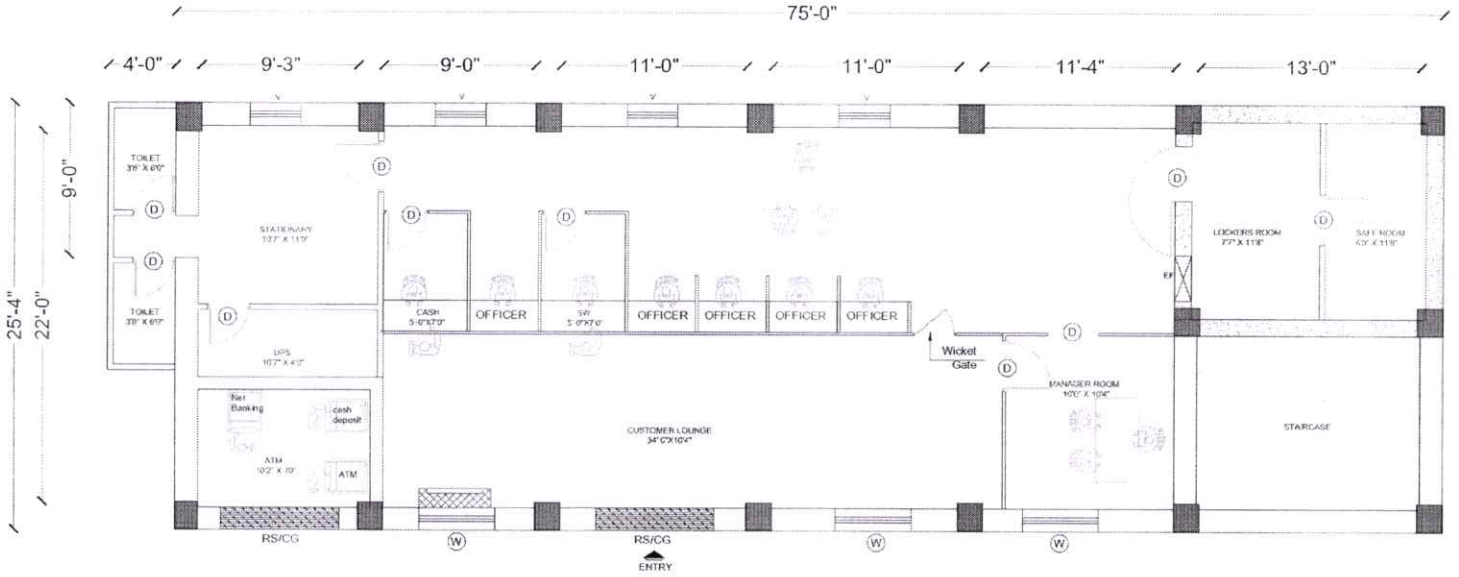

PROJECT:

INDIAN BANK
PALAMANERU

TITLE:

COUNTER LAYOUT

N

DATE :25-11-22

ER.BADAM SUNDARA RAO
M.TECH.(GTE),M.TECH(STRU),F.I.E
F.I.STRUCT. ENG., F.I.V. A.M.ASCE (USA)
SENIOR PROFESSIONAL ENGINEER
& CHARTERED ENGINEER
SUNDAR ASSOCIATES
PULAVARTHY STREET, KAKINADA-533001

अंचल कार्यालय
ZONAL OFFICE
इंडियन बैंक Indian Bank
तिरुपति
TIRUPATI

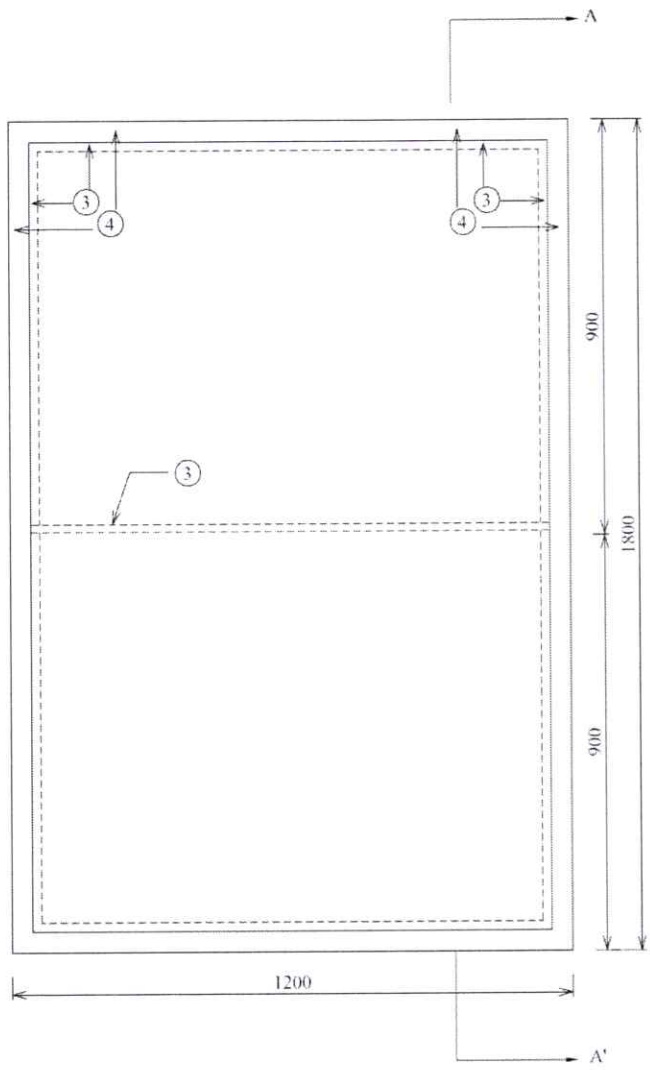

PLAN

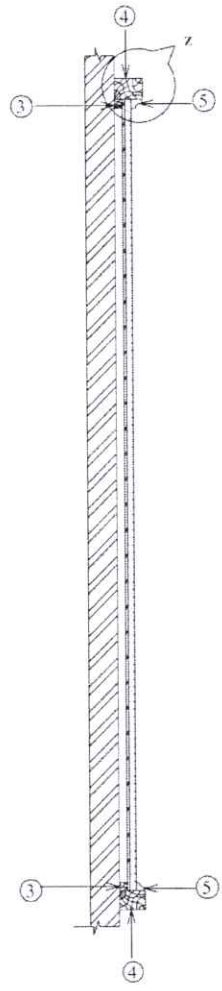

SECTION -AA'

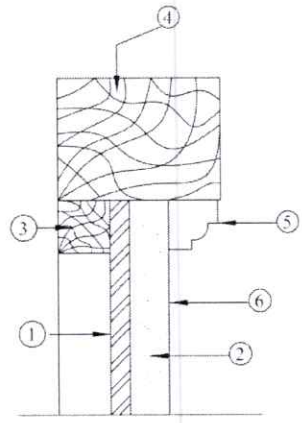

DETAIL AT ' Z '

	INDEX 1. 6mm COMMERCIAL PLY 2. 12 mm THICK SOFT BOARD 3. SAL WOOD (16 X 16mm) 4. SAL WOOD (50 X 37mm) 5. D S W BEADING OF GRACE WOOD (15 X 15 mm) NO AF 1515 6. PLAIN COLOURED COTTON CLOTH COSTING Rs 200/Rm	DRAWN : DATE : DRG. NO :	
		DISPLAY / SOFT BOARD	

अंचल कार्यालय
ZONAL OFFICE
तिरुपति
TIRUPATI

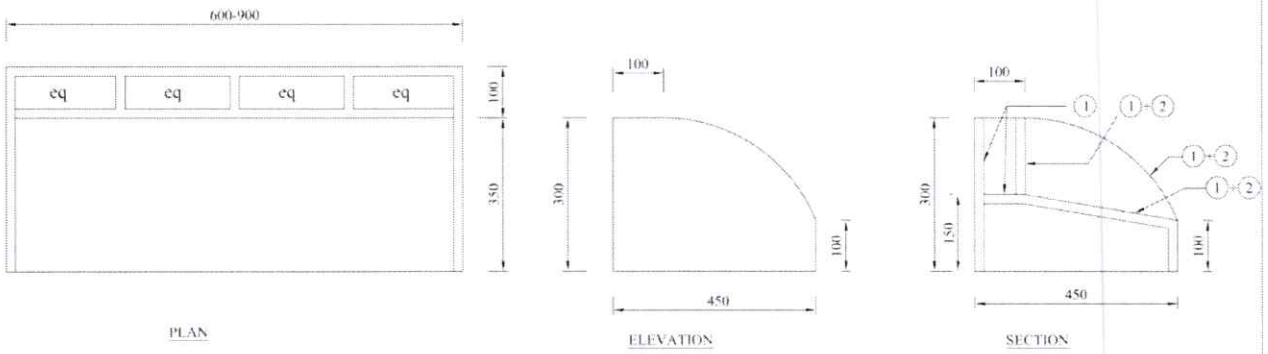

	INDEX 1. 18 mm THICK COMMERCIAL PLY 2. 1 mm THICK LAMINATE	DR : DATE: DRG NO: WRITING TABLE

अंचल कार्यालय
ZONAL OFFICE
Indian Bank
Allahabad
तिरुपति
TIRUPATI

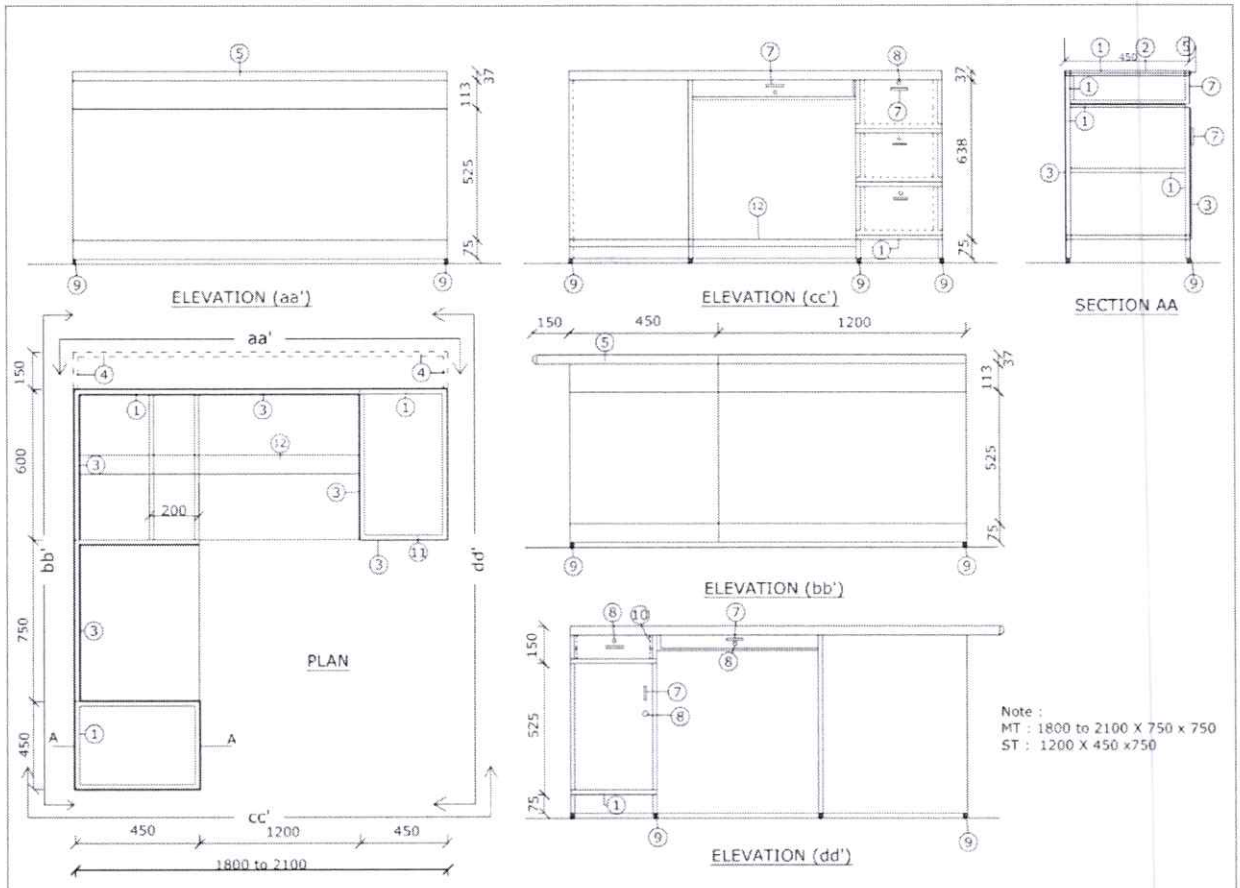

	INDEX : 1. PLY 2. 1 mm THICK LAMINATE FOR TABLE TOP 3. 1MM LAMINATE 4. 37 X 18 mm THICK TEAK WOOD MEMBER 5. TABLE EDGE BEADING (18 X 37mmL.W)	6. DIW BEADING OF GRACE WOOD (15 X 8 mm) 7.100 mm LONG HANDLE 8. GODREJ LOCK 9. PVC BUSH 10. DRAWER SLIDE 11. PLY FOR SHUTTER 12. TEAK WOOD FOOT REST (75 X 36mm)	DRAWN : DATE : DRG No : Branch Manager TABLE

अंचल कार्यालय
ZONAL OFFICE
तिरुपति
TIRUPATI

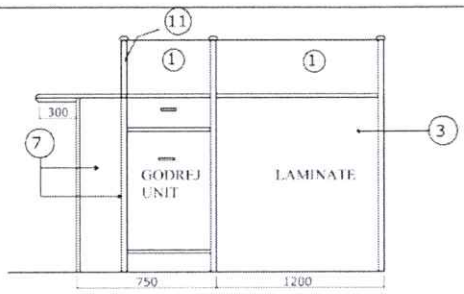

SECTION @ X

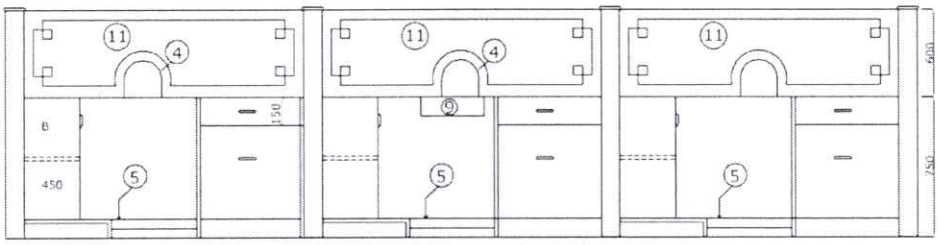

FRONT ELEVATION

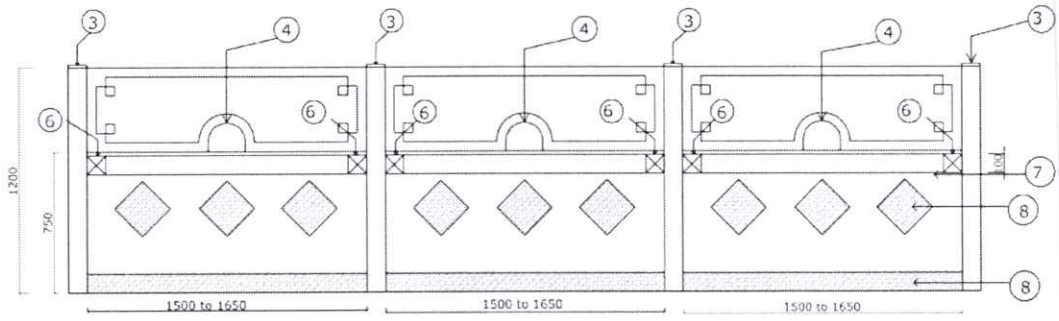

ELEVATION @ MODESTY PANEL

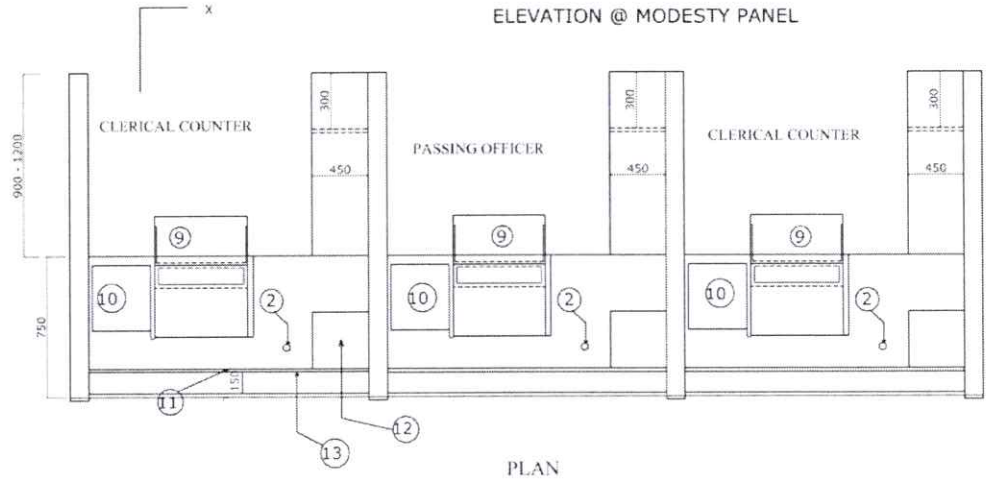

PLAN

INDEX
1) 12 mm THICK CLEAR GLASS WITH DESIGN BORDER
2) WIRE MANAGER HOLE WITH PVC COVER
3) AS PER SEMI PARTITION DRG. BUT WITH 12 mm GLASS WITH DESIGN BORDER ON TOP PANEL
4) GLASS OPENING
5) 50 x 100 mm WOOD FOOT REST
6) 100X100 LAMINATE IN DESIGN PATTERN
7) 18 mm COMMERCIAL PLY
8) 18 mm COMMERCIAL PLY WITH 1mm THICK LAMINATE
9) LAMINATED KEY BOARD TRAY
10) DRAWER UNIT
11) 12 mm THICK CLEAR GLASS
12) CPU PEDESTAL 300 x 450 x 100 mm
13) MODESTY PENEL BELOW TOP

Drawn :

Date :

Drg no :

SINGLE WINDOW COUNTER

अंचल कार्यालय
ZONAL OFFICE
Indian Bank
तिरुपति
TIRUPATI

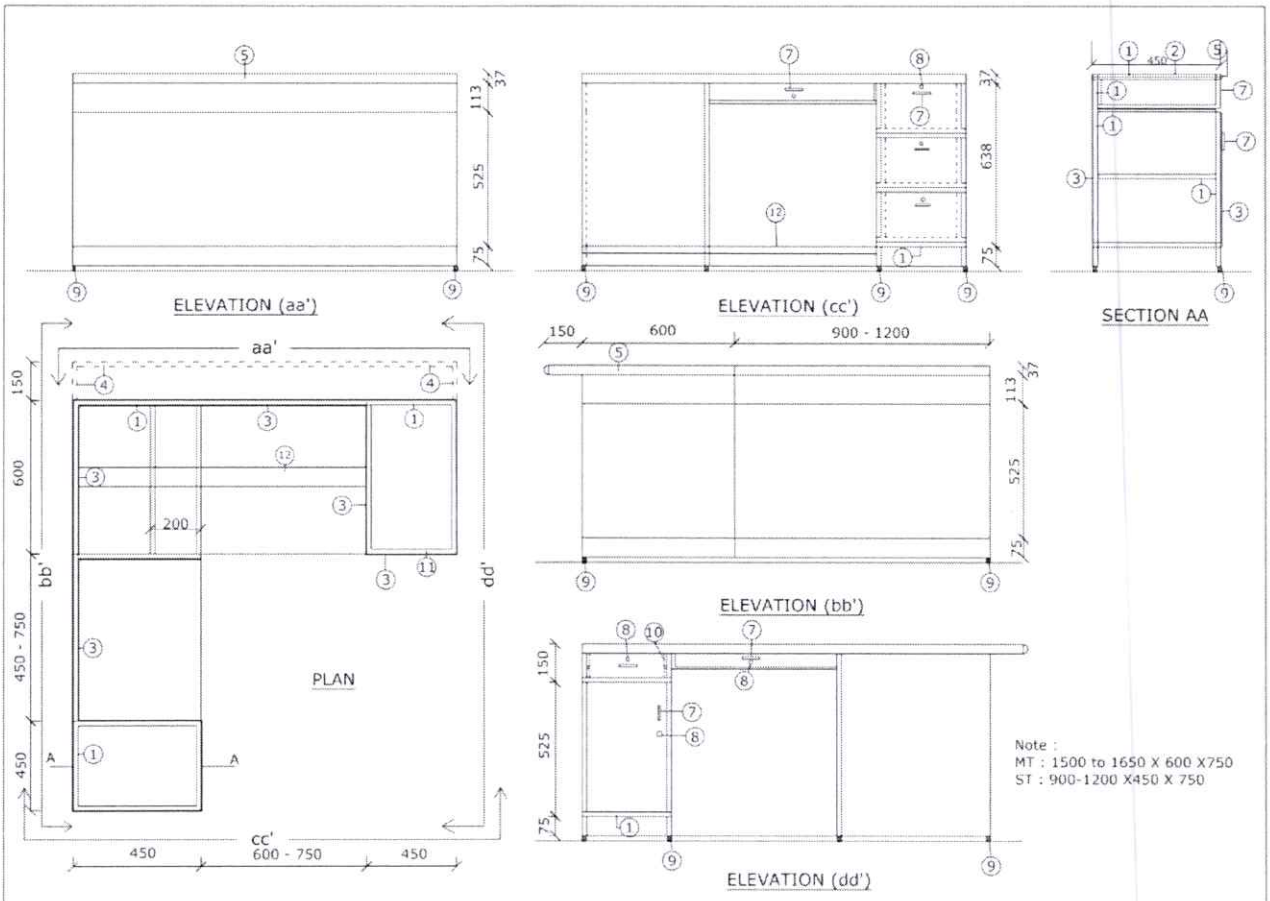

	INDEX : 1.18 mm THICK COMMERCIAL PLY 2. 1.5mm THICK LAMINATE FOR TABLE TOP 3. 1mm LAMINATE 4. 37 X 18 mm THICK TEAK WOOD MEMBER 5. TABLE EDGE BEADING (18 X 37mmL.W)	6. DIW BEADING OF GRACE WOOD (15 X 8 mm) 7.100 mm LONG HANDLE 8. GODREJ LOCK 9. PVC BUSH 10. DRAWER SLIDE 11. 18 mm COMMERCIAL PLY FOR SHUTTER 12. TEAK WOOD FOOT REST (75 X 36mm)	DRAWN : DATE : DRG.NO. : OFFICER EXECUTIVE TABLE

अंचल कार्यालय
ZONAL OFFICE
Indian Bank
तिरुपति
TIRUPATI

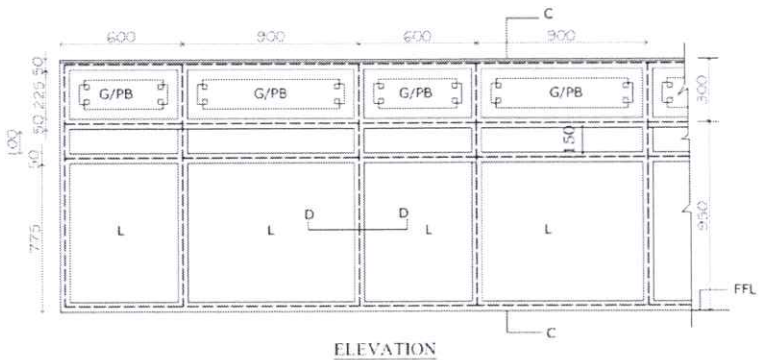

ELEVATION

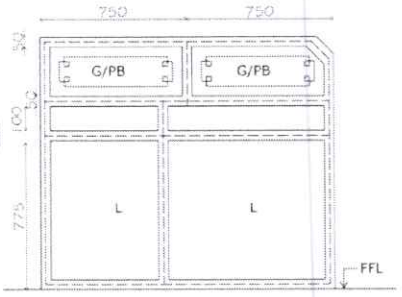

ELEVATION

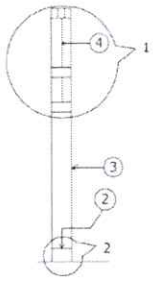

SECTION 'CC'

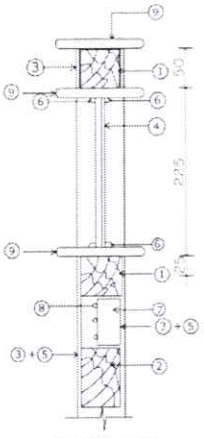

DETAIL AT:1

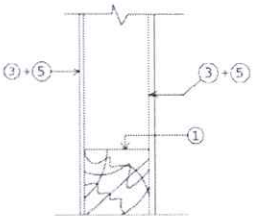

DETAIL AT:2

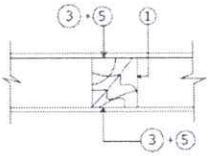

SECTION 'DD'

	INDEX 1. SAL WOOD (50 X 50 mm) 2. SAL WOOD (50 X 75mm) 3. COMMERCIAL PLY (6 mm thick) 4. 6mm THICK CLEAR GLASS WITH ENGRAVED DESIGN BORDER OF 6 mm THICK 5. 1 mm THICK LAMINATE	6 .DECORATIVE BEACH WOOD BEADING OF 12X12mm. 7. ELECTRICAL SWITCH BOARD 8. PVC CONDUITS 9. 100 x 12 mm BEADING WOOD BEACHING G- GLASS L-LAMINATE PB - PIN BOARD WITH CLOTH	DRAWN : DATE : DRG No:	
			SEMI HEIGHT PARTITION	

अंचल कार्यालय ZONAL OFFICE
तिरुपति

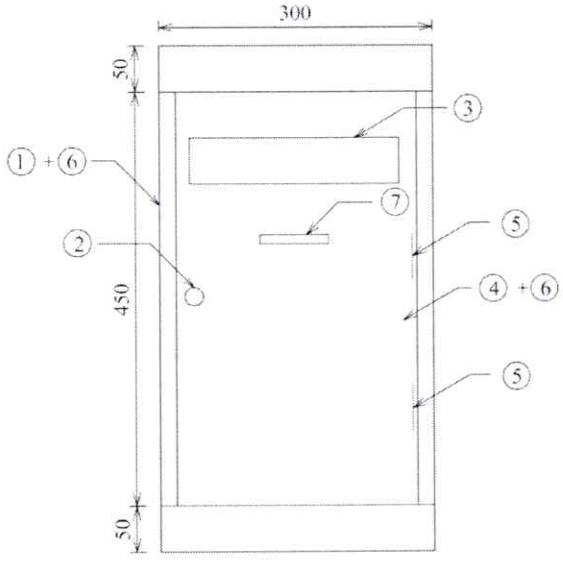

ELEVATION

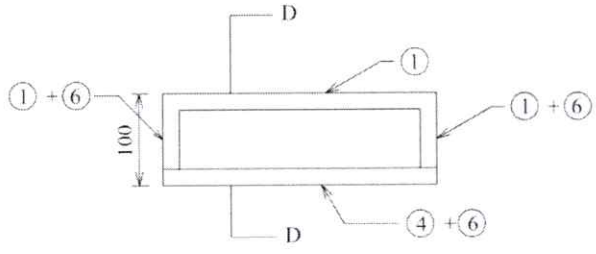

PLAN

SUGGESTION BOX

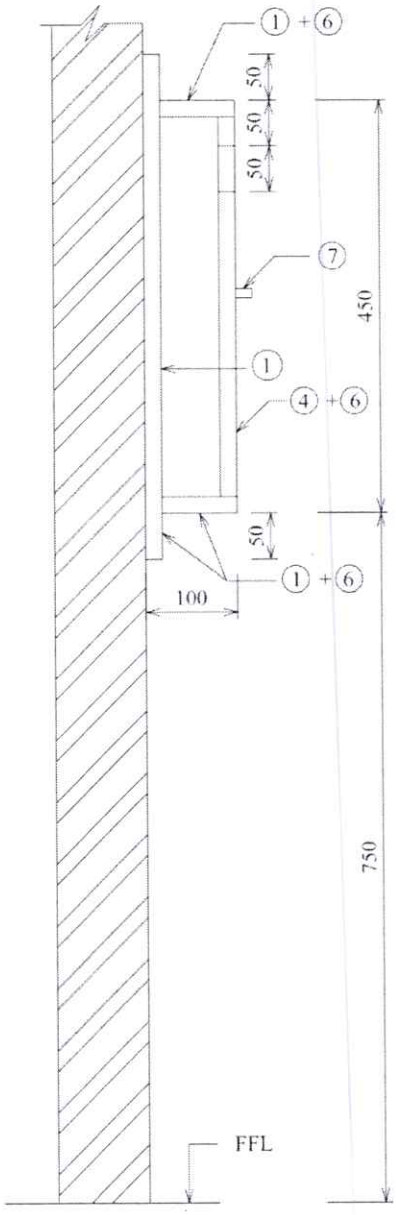

SECTION@DD

	INDEX: 1. 18 mm THICK COMMERCIAL PLY 2. GODREJ LOCK 3. OPENING OF 230X50mm WITH TW BEADING 4. SHUTTER OF 18 mm THICKCOMMERCIAL PLY 5. HINGE 50mm LONG 6.1MM LAMINATE 7. HANDLE 75mm LONG	Drawn : Date : DRG NO:	
		SUGGESTION BOX	

अंचल कार्यालय
ZONAL OFFICE
तिरुपति
TIRUPATI